NEO LIFTKAR HD

HD UNI / HD FOLD / HD DOLLY / HD FOLD DOLLY



INSTRUCTION MANUAL

English

SANO makes life easier.

INTRODUCTION **3**

1 SAFETY GUIDELINES / TECHNICAL DATA **4**

1.1 General safety guidelines 4
1.2 Built-in safety features (depending on model) 5
1.3 Technical data LIFTKAR HD models 6
1.4 Technical data of quick-change battery unit 6

2 CONTROL FEATURES **7**

2.1 UNI model 7
2.2 Fold model 7
2.3 Dolly model 8
2.4 Fold Dolly model 8
2.5 Control unit 9
2.6 UP/DOWN switch on handlebar 10
2.7 Charging status indicator 10
2.8 Switching off 11

3 FITTING AND REMOVING QUICK-CHANGE BATTERY PACK **12**

3.1 Fitting the battery pack 12
3.2 Removing battery pack 12

4 OPERATION **13**

4.1 Climbing UP stairs 13
4.2 Climbing DOWN stairs 13

5 HOW THE LIFTKAR EDGE BRAKING SYSTEM WORKS **14**

5.1 Enabling the system 14
5.2 Deactivating and blocking the edge braking system 14
5.3 Automatic switch-off after extended period of no operation 15
5.4 How to test the step edge braking system 16

6 QUICK-CHANGE BATTERY **17**

6.1 Charger unit 18

7 ACCESSORIES AND OPTIONS **19**

8 DISPOSAL **20**

9 WARRANTY AND PRODUCT LIABILITY **20**

9.1 Warranty 20
9.2 Liability 21

10 CE DECLARATION OF CONFORMITY / PATENT REGISTERED **21**

CONTACT **24**

INTRODUCTION

CONGRATULATIONS!

WE WOULD LIKE TO CONGRATULATE YOU ON THE PURCHASE OF YOUR POWERED STAIRCLIMBER TRUCK TYPE LIFTKAR HD!

You have chosen a unit using the very latest stairclimber technology for negotiating different types of steps and stairs safely and efficiently.

Development of the LIFTKAR HD focussed especially on user safety and user friendliness.

Key features:

Two UP / DOWN switches - one on the left and one on the right of the handle unit - for perfect user comfort. Ideal for both left- and right-handed operators.

Automatic braking system that ensures the main wheels stop reliably at the edge of each step from the moment the unit is switched on.

Optimum protection against impact to the support wheels thanks to a lubricated mechanical clutch.

Additional electronic protection prevents damage due to overloading.

2 climbing speeds and two operating modes (single-step mode and continuous mode) to perfectly match your operating style.

Excellent performance on spiral staircases.

In order to update you about product news as well as technical changes (e.g. options, accessories) we ask you to register your product online.

https://www.sano-stairclimbers.com/product-registration

1 SAFETY GUIDELINES / TECHNICAL DATA

1.1 GENERAL SAFETY GUIDELINES

- Make sure nobody is located underneath the load.
- Always secure the load with the safety belt included.
- Always wear non-slip shoes. Some steps may be very smooth.
- Always wear shoes with steel toecaps.
- The Liftkar may only be operated by trained personnel.
- Never reach into the unit's transport mechanism with your hands.
- Plan each journey on the stairs according to the current situation before you start.
- Always remove the battery pack before stowing the LIFTKAR. Firstly so the LIFTKAR cannot be switched on inadvertently during transport and secondly because the LIFTKAR is 1.6 kg lighter without the battery pack.



HERSTELLER

Manufacturer



HERSTELLUNGSDATUM

Date of manufacture



SERIENNUMMER

Serial number



TROCKEN AUFBEWAHREN

Keep dry



TEMPERATURGRENZWERTE ANWENDUNGSBEREICH 5 º C BIS 40 º C

Temperature limit Range of application

5 º C till 40 º C (41 º F till 104 º F)



GEBRAUCHSANWEISUNG BEACHTEN

Consult instructions for use



CE-KENNZEICHNUNG

CE-Marking



SERBISCHE CE-KENNZEICHEN

Serbian CE-Marking



ELEKTROSCHROTT

Electronic Waste

1.2 BUILT-IN SAFETY FEATURES (DEPENDING ON MODEL)

Fold model:

- Each time before you use the stairclimber, make sure that the quick release lever (figure 2, chapter 2.2) on the handles is tightened properly. It must be possible to tilt the load from the standing position without assistance. The position of the handle section in relation to the frame must not be altered.

Dolly model:

- Figure A shows the protection system when retracted.
- Figure B shows the protection system when extended. The sliding arm must be at right-angles to the protection system.



A

A: Sliding Arm - B: Dolly-System



B

A: Sliding Arm - B: Dolly-System

- Each time before starting up the stairclimber, make sure that the protection system is properly folded away (retracted, figure D).



C

Folding away



D

Support system retracted

IMPORTANT

Do **not** use the protection system in the extended position while operating the stairclimber on stairs.

1.3 TECHNICAL DATA LIFTKAR HD MODELS

MODEL	UNIVERSAL	DOLLY	FOLD	FOLD DOLLY
Weight with batterie	37,1 kg	43,6 kg	37,8 kg	44,9 kg
Weight without batterie	35,5 kg	42 kg	36,2 kg	43,3 kg
Range in steps UP and DOWN (depends on weight transported)	220 kg: approx. 700 steps, 330 kg: approx. 500 steps, 360 kg: approx. 500 steps			
Climbing speed I	220 kg: approx. 9 steps/min, 330 kg: approx. 6 steps/min, 360 kg: approx. 6 steps/min			
Climbing speed II	220 kg: approx. 15 steps/min, 330 kg: approx. 10 steps/min, 360 kg: approx. 10 steps/min			
Toe plate dimensions	530 x 183 mm			

1.4 TECHNICAL DATA OF QUICK-CHANGE BATTERY UNIT

Weight: 1.6 kg

Capacity: 7.2 Ah

Voltage: 29 VDC

Battery type: Lithium ion

2 CONTROL FEATURES

2.1 UNI MODEL



1

2.2 FOLD MODEL



2

2.3 DOLLY MODEL



3

2.4 FOLD DOLLY MODEL



4

2.5 CONTROL UNIT

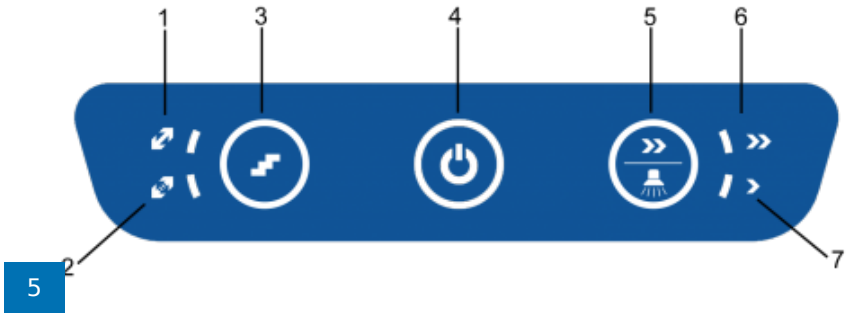

5

1: Multi-step mode - 2: Single-step mode - 3: Single/Multi-step button - 4: ON/OFF button / status display - 5: Speed button / Stair light - 6: Speed fast display - 7: Speed slow display

2.5.1 SINGLE/MULTI-STEP MODE

Select the mode required by pressing the Single/Multi-step button. The LED indicates the selected mode.

2.5.2 ON/OFF BUTTON / STATUS DISPLAY

- **Green light on**: The LIFTKAR is switched on. The climber mechanism switches on when the button is pressed and stops when it is released - see also chapter Operation [4.1])
- **Lights up constantly red and a beep signal sounds**: the connection to the motor brake is interrupted. It is not possible to operate the stairclimber. Take the stairclimber to the nearest specialist dealer for inspection.
- **Flashing red**: The LIFTKAR is overloaded. (The LED flashes for approx. 3 seconds and then goes out.) (See also chapter Operation [4.2.1])
- **Alternating red and green**: the battery pack is running low and urgently needs to be recharged. It is recommended that you move down stairs and either change the battery pack or recharge it with the quick charger supplied.

2.5.3 SPEED BUTTON / STAIR LIGHT

Use the speed switch to select higher or lower climbing speeds. The stair climbing speed depends on the model, see technical data [1.3]).

The lower speed is recommended for beginners, heavy loads and difficult situations.

Press the speed button for approx. 10 seconds to activate the stair light.

2.6 UP/DOWN SWITCH ON HANDLEBAR

With an UP/DOWN switch located both on the left and right of the handlebar (figure 6), this unit is ideal for both left- and right-handed operators.

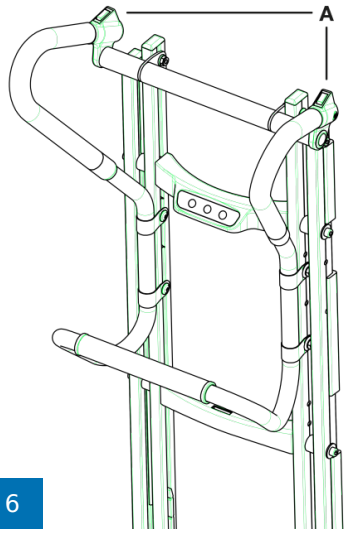

6

A: UP/DOWN switch

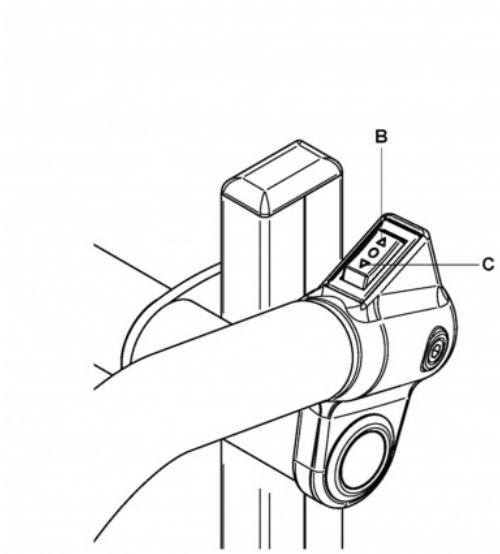

7

B: DOWN - C: UP

2.7 CHARGING STATUS INDICATOR

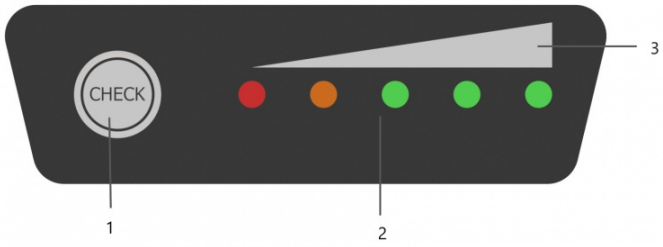

8

1: Activation button charging status display - 2: LED display - 3: Visualisation

Pressing the activation button switches on the LED charging status indicator; if all five LEDs light up, the quick-change battery pack is 100% charged.

0 ~ 10 %	BLINKING	OFF	OFF	OFF	OFF
10 ~ 23 %	LIGHT	BLINKING	OFF	OFF	OFF
23 ~ 35 %	LIGHT	LIGHT	OFF	OFF	OFF
35 ~ 48 %	LIGHT	LIGHT	BLINKING	OFF	OFF
48 ~ 60 %	LIGHT	LIGHT	LIGHT	OFF	OFF
60 ~ 70 %	LIGHT	LIGHT	LIGHT	BLINKING	OFF
70 ~ 80 %	LIGHT	LIGHT	LIGHT	LIGHT	OFF
80 ~ 90 %	LIGHT	LIGHT	LIGHT	LIGHT	BLINKING
90 ~ 100 %	LIGHT	LIGHT	LIGHT	LIGHT	LIGHT

2.8 SWITCHING OFF

The unit can be switched off in the following ways:

- Pressing the ON/OFF switch for longer than 3 seconds.
- Removing the quick-change battery pack (see section 3).
- Leaving the unit for a period of time: The LIFTKAR switches off automatically after 10 minutes.

Removing the battery gives a higher degree of safety than the automatic switch off because the ON/OFF button can easily be touched inadvertently.

3 FITTING AND REMOVING QUICK-CHANGE BATTERY PACK

SCHNELLWECHSELAKKU - LITHIUM AKKU
CHARGE BATTERY BEFORE USAGE

3.1 FITTING THE BATTERY PACK

- Align the battery pack between the guides on the frame.
- Gently press the battery pack downwards. The battery pack clicks into place.
- Your LIFTKAR is ready for use.

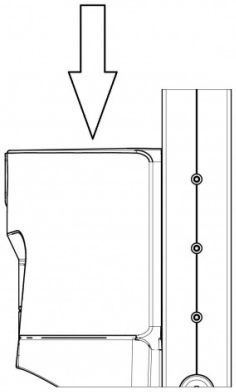

3.2 REMOVING BATTERY PACK

- Pull battery safety lever
- Pull the battery upwards out of the guides.

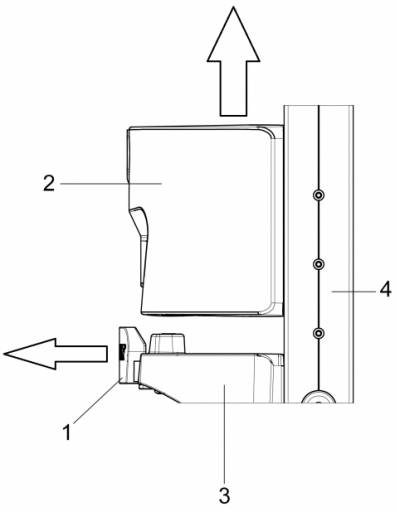

4 OPERATION

4.1 CLIMBING UP STAIRS

Insert the battery and press the ON/OFF button until the status display is constantly green.

The LIFTKAR is now ready for operation.

Pressing one of the UP/DOWN buttons (Figure 6, left and right of handlebar, arrow upwards points towards operator) starts moving the lift arm with the support wheels and lifts the LIFTKAR onto the next step. The cycle is repeated until the switch is released (Continuous mode). In Single-step mode the LIFTKAR stops when the main wheels reach the next step.

IMPORTANT

As soon as the main wheels have "landed" on the next step, always draw the unit away from the edge of the step and contacts the step above.

4.2 CLIMBING DOWN STAIRS

Insert the battery and press the ON/OFF button until the status display is constantly green.

The LIFTKAR is now ready for operation.

Pressing one of the UP/DOWN switches (Figure 6, left and right of handlebar, arrow downwards points away from operator) starts moving the lift arm with the support wheels and lowers the LIFTKAR onto the next step. The cycle is repeated until the switch is released (Continuous mode). In Single-step mode the LIFTKAR stops when the main wheels reach the next step.

IMPORTANT

As soon as the main wheels have landed on the step, always push the Liftkar to the edge of the next step. The brake wheels stop the Liftkar reliably on the edge of the step.

4.2.1 OVERLOAD

If the unit is overloaded the drive motor stops and the Status display flashes red for 3 seconds before going out. The unit has to be switched on again.

If the power of the battery pack is running out then the overload signal will be displayed even on loads below the specified capacity.

4.2.2 THE LIFTKAR IS NOT A RUBBER MAT!

Never throw a load onto the LIFTKAR! We recommend that this kind of loading method is avoided because it causes higher wear and may damage the LIFTKAR control unit as a result of vibrations.

4.2.3 DO NOT RIDE OVER KERBS AT AN ANGLE

Always ride over kerbs or similar edges with both wheels contacting the edge at the same time. This will prevent damage to the drive unit.

4.2.4 OPERATION ON SPIRAL STAIRCASES

Please observe the following points when operating the stairclimber on spiral staircases:

The LIFTKAR HD moves inwards when climbing up, so:
For climbing UP start on the outside of the staircase.

The LIFTKAR HD moves outwards when going down, so:
For climbing DOWN start on the inside.

If you do start moving too close to the banisters/wall then shift the unit to the side by reversing (on a landing or wider step if possible) and start again at a tighter angle.

---

5 HOW THE LIFTKAR EDGE BRAKING SYSTEM WORKS

5.1 ENABLING THE SYSTEM

The edge braking system is enabled automatically as soon as the LIFTKAR is switched on using the "OFF/OFF" switch (Figure 5). This ensures that the brake blocks inside the rims of the main wheels block the main wheels as soon as the unit approaches the edge of a step. The brakes are released mechanically as soon as the main wheels contact the next step. The brake system remains active and engages automatically when the main wheels approach the edge of the next step.

5.2 DEACTIVATING AND BLOCKING THE EDGE BRAKING SYSTEM



The edge braking system is blocked if the LIFTKAR is switched off using the "ON/OFF" switch (figure 5 - LED is no longer green or flashing) and the unit is parked on its toe plate.
The LIFTKAR then no longer stops automatically at the edge of a step.

NOTE

It is a good idea to deactivate the brake system on uneven ground because bumps or dips in the ground would otherwise cause the main wheels to be stopped if one of both of the edge brakes were activated.

IMPORTANT

Make sure that the system is switched on again before starting each movement downwards to the next step.
Easily recognisable by the green status indicator. Only then is the edge braking system engaged.

5.3 AUTOMATIC SWITCH-OFF AFTER EXTENDED PERIOD OF NO OPERATION

Please note that the LIFTKAR switches off automatically to save the battery pack after approx. 10 min without the UP/DOWN switch being pressed). The edge braking system is also deactivated (providing the unit is parked on the toe plate).

WARNING

Always check the status indicator for its switch-on state after longer breaks before continuing to use the stairclimber (status indicator must light up green). Only then is the edge braking system engaged.

NOTE

Do I have to make sure the edge braking system is activated on every step? No, you only have to approach the edge of the step.
Hand width rule: It is enough to position the LIFTKAR roughly one hand width away from the edge of the step (distance between point main wheels contact step and edge of step, i.e. approx. 7 – 8 cm). Now you can start the next lifting cycle and the LIFTKAR will land safely on the next step.

5.4 HOW TO TEST THE STEP EDGE BRAKING SYSTEM

Correct functioning of the step edge braking system is essential for safe operation of the stairclimber.
It is therefore essential that you check the function of the step edge braking system each time before you use the stairclimber.

- Test the step edge braking system (without load):

1. Tilt the LIFTKAR back until it is at an angle of approx. 45° (figure 7).
2. Switch on the stairclimber by pressing the main switch.
3. When you push the LIFTKAR forwards the step edge braking system should engage to brake/stop the main wheels of the stairclimber.
4. If the brakes do not engage uniformly (uneven braking on left and right wheel), do not use the LIFTKAR for climbing stairs until it has been checked by an authorised Sano technician.

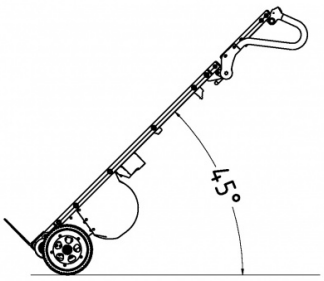

7

6 QUICK-CHANGE BATTERY

- The charger automatically switches to trickle charging so overcharging is not possible.
- Do not leave the battery discharged or half discharged. Always charge immediately after use.
- The optimum temperature for charging is 20 – 25 °C. Too cold or too warm has a negative effect on the capacity.
- Operating and charging Temperature: For unrestricted functionality, the cell temperature of the battery must always be kept above 0°C. Therefore, we recommend storing the battery between +5°C and +25°C.

		Lithium-ion battery	Stair climber
Operating temperature	°C	0 ... +40	-10 ... +40
Charging temperature	°C	0 ... +40	-

If the battery has not been fully charged or tends to lose charge too rapidly, this will not only reduce the speed of the LIFTKAR but also reduce the capacity. It may move into the overload mode as a result, even with light loads. See Operation 4.3.3.

Charging time: approx. 4.5 h depending on charge level

6.1 CHARGER UNIT

The battery charger supplied is extremely powerful. An LED display gives a clear indication of charging status. The charge indicator gives you an idea whether the battery pack is fully charged or not. It is worth checking that the battery pack is fully charged before using the Liftkar.



The charge status is displayed as follows by a LED:

- If the LED is lit continuous red the battery pack is being charged.
- If the LED is lit continuous green the battery pack is fully charged. The charger can be left connected to the batteries after full charge (green light), without harming the batteries. The charger uses minimum power in this stand-by mode, (after battery is fully charged), maintains the batteries at full charge and extends battery life. This is accomplished with electronic circuitry that controls and regulates the amount of charging current that is sent from the charger to the battery being charged.

6.1.1 TECHNICAL DATA

Mains voltage supply (50/60 Hz, 1,8 A (max)): 100-240 V AC

Nominal rating (input): 24 W

Charging voltage: 24 V DC

Theoretical charging current: 2,0 A

Safety approval: cUL, CE

6.1.2 SAFETY GUIDELINES

Please note the following:

- Protect against moisture.
- Do not pull the plug out of the socket by its cord.
- Never use the charger unit if it has a damaged cable or plug, replace it immediately.
- The device should be connected directly to a power supply, never use an extension cord.
- The device is intended for indoor use only, it should never be exposed to rain.
- If the performance of the battery decreases significantly, it is time to replace the battery.
- Store the charger in a cool and dry place when not in use.
- Disconnect the device from the mains before inserting or removing the battery from the stairclimber.
- Warning: explosive gases. Protect from fire and sparks. Ensure the room is well ventilated during charging.
- During charging, the battery must be in a well-ventilated room.
- Children are not able to correctly assess the dangers of electrical devices. Do not allow children or infirm persons to use electrical devices without supervision.
- The device is not intended for use by children, infirm persons, or persons with insufficient knowledge, unless they are supervised or given sufficient training. Make sure that children do not play with the device.
- The device may only charge batteries that comply with EN directives (and show a CE or GS mark).

6.1.3 USE ONLY FOR THE PURPOSE INTENDED

- The charger is designed exclusively for charging the **original lithium ion rechargeable batteries.**

6.1.4 CE MARK FOR CHARGER UNITS

The charger units fulfil the criteria laid down in the low-voltage and electromagnetic compatibility directive and are therefore designated with the CE sign.

---

7 ACCESSORIES AND OPTIONS

A full range of accessories and options is available. The list includes various sizes of toe plate, safety belts, and a choice of frame heights.

8 DISPOSAL

Liftkar HD stairclimbers are durable products. At the end of their useful life the stairclimber components and charger should be disposed of properly. Make sure the materials are separated carefully for disposal in line with the material codes relating to each component.

The stairclimber does not contain any hazardous materials and is fully recycling-compatible. The printed circuit boards and the rechargeable battery must be disposed of using a suitable recycling process.

Do not simply dispose of the battery pack in a household dustbin, however. If there are any further questions, please ask your specialist dealer.

Sano can organise professional disposal of the whole stairclimber unit, against payment, if required.

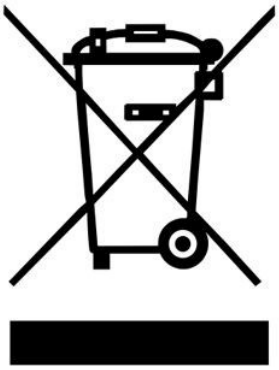

9 WARRANTY AND PRODUCT LIABILITY

9.1 WARRANTY

The warranty period for the LIFTKAR is 12 months from the date of purchase and covers material flaws and manufacturing errors.

The warranty does not cover wear parts, wilful damage and damage due to excessive stress or incorrect usage.

Any subsequent modifications to the unit are not permitted and automatically make the warranty void.

9.2 LIABILITY

SANO Transportgeraete GmbH is not responsible for the safety of the LIFTKAR HD if:

- the LIFTKAR HD is used for a purpose for which it is not intended.
- repairs, installation or other work have been carried out by unauthorised persons.
- the instructions in this manual are not complied with.
- non-Sano components are fitted or linked to the LIFTKAR HD.
- original components are removed.
- Recommendation for Training
  The manufacturer recommends attending product training conducted by a qualified person. **Liability disclaimer:** Failure to undertake the recommended training absolves the manufacturer of any liability for damages to the device, personal injury, or property damage resulting from improper or incorrect operation.

10 CE DECLARATION OF CONFORMITY / PATENT REGISTERED

10.1 CE DECLARATION OF CONFORMITY

SANO Transportgeraete GmbH declares that the LIFTKAR HD stairclimber fully complies with the relevant health and safety specifications laid down in the EU directive for machines 2006/42/EG, appendix IIA. Any changes made to the product without our prior consent render this declaration void.



Jochum Bierma (Ing.), Managing Director

10.2 PATENT REGISTERED

The modular design of the base frame is legally protected by a patent.

NOTES

CONTACT

SANO Transportgeraete GmbH
Gewerbezeile 15
4040 Linz, Austria

Phone: +43 7239 51010 100
Fax: +43 7239 51010 001

office@sano.at

SANO Deutschland GmbH
Geigelsteinstraße 10
83080 Oberaudorf
Germany

Tel. +49 8033 / 308 96 0
Fax +49 8033 / 308 96 17
info@sano-treppensteiger.de

www.sano-treppensteiger.de

SANO UK Powered Stairclimbers Ltd.
Bristol Court, Betts Avenue
Martlesham Heath
Ipswich, Suffolk / IP5 3RY, England

Tel. +44 1473 / 333 889
Fax +44 1473 / 333 742
info@sano-uk.com

www.sano-uk.com

Subject to updates / LIFTKAR HD 2023-03