LIFTKAR SAL PBS

SAL PRO UNI / SAL PRO ERGO / SAL PRO FOLD / SAL PRO FOLD-L /
SAL PRO FOLD-L DOLLY KICK-OUT / SAL PRO DR-PISTOL

LIFTKAR® SAL PbS



INSTRUCTION MANUAL

English

SANO makes life easier.

INTRODUCTION **3**

1 SAFETY GUIDELINES / TECHNICAL DATA **3**

1.1 General safety guidelines 3
1.2 Technical data of the LIFTKAR SAL 4

2 CONTROLS **4**

2.1 Model ERGO 4
2.2 Model UNI 6
2.3 Modell DR-PISTOL 7
2.4 Model FOLD 7
2.5 Model FOLD-L 9
2.6 Modell FOLD-L DOLLY KICK-OUT 10
2.7 The swivel joint (FOLD / FOLD-L) 10
2.8 Control unit 11
2.9 Ascend button in upper handle 12
2.10 Safety flap 12
2.11 Hauptschalter 12
2.12 Switching off 13

3 FITTING AND REMOVING THE BATTERY **13**

3.1 Fitting the battery 13
3.2 Removing the battery 13

4 OPERATION **15**

4.1 Ascending stairs 15
4.2 Descending stairs 15
4.3 Please pay attention to 17

5 QUICK-CHANGE BATTERY **19**

5.1 Battery charger 19

6 ACCESSORIES AND OPTIONS **21**

7 DISPOSAL **22**

8 WARRANTY AND LIABILITY **22**

8.1 Warranty 22
8.2 Liability 24

9 CE DECLARATION OF CONFORMITY / DESIGN PROTECTION BY PATENTS **24**

CONTACT **26**

INTRODUCTION

CONGRATULATIONS!

With the new LIFTKAR SAL you have purchased a handy modular–designed sack truck with an unladen weight of only 16kg. Once you fit the snap-on battery, this simple sack truck becomes a versatile all- rounder: a normal sack truck for general use on level ground and a powered stair climber for use on steps and stairs. Additional features, such as the wide pneumatic tyres (also available in puncture proof), make this equal to any conventional hand truck for use outdoors and for professional deliveries but with the added bonus of going up steps and stairs as well.

With the SAL Series climbing stairs has been reduced to the essential: The LIFTKAR pulls itself up onto the step above and lifts to only the necessary step height. During descent, the motor acts like an electric brake and the load is brought down without “bumping”. It is also ideal for winding staircases and across tight landings.

The LIFTKAR SAL has a mechanical clutch which will prevent damage if the unit is used to descend the stairs with the controls in the ascent position. The unit also features electronic overload protection preventing ascent with too heavy a load.

The Liftkar SAL has two ascending speed settings (slow and fast – with a speed of up to 48 stairs per minute), plus a wide variety of model options, lifting capacities and additional accessories.
In other words, a professional for professionals!

In order to update you about product news as well as technical changes (e.g. options, accessories) we ask you to register your product online.

https://www.sano-stairclimbers.com/product-registration

1 SAFETY GUIDELINES / TECHNICAL DATA

1.1 GENERAL SAFETY GUIDELINES

- Always ensure that there is no one beneath the load
- Always secure the load with the appropriate straps or other accessories
- Always wear skid-proof shoes. Some stairs can be extremely slippery
- Always wear shoes with steel caps
- Never reach into the lifting mechanism with your hands if the battery is inserted
- At first practice using Liftkar SAL either unladen or with a light load of max. 25 kgs
- For transportation remove battery to lighten the unit and to prevent accidental operation in transit



HERSTELLER
Manufacturer



HERSTELLUNGSDATUM
Date of manufacture

SERIENNUMMER

Serial number

TROCKEN AUFBEWAHREN

Keep dry

TEMPERATURGRENZWERTE ANWENDUNGSBEREICH 5 º C BIS 40 º C

Temperature limit Range of application 5 º C till 40 º C (41 º F till 104 º F)

GEBRAUCHSANWEISUNG BEACHTEN

Consult instructions for use

CE-KENNZEICHNUNG

CE-Marking

SERBISCHE CE-KENNZEICHEN

Serbian CE-Marking

ELEKTROSCHROTT

Electronic Waste

1.2 TECHNICAL DATA OF THE LIFTKAR SAL

Valid for all LIFTKAR SAL models			
Load capacity	110 kg	140 kg	170 kg
Maximum climbing speed	48 steps/min	35 steps/min	29 steps/min
Maximum step height	210 mm		
Autonomy (maximum) steps up and down	approx. 2000 steps		

2 CONTROLS

2.1 MODEL ERGO

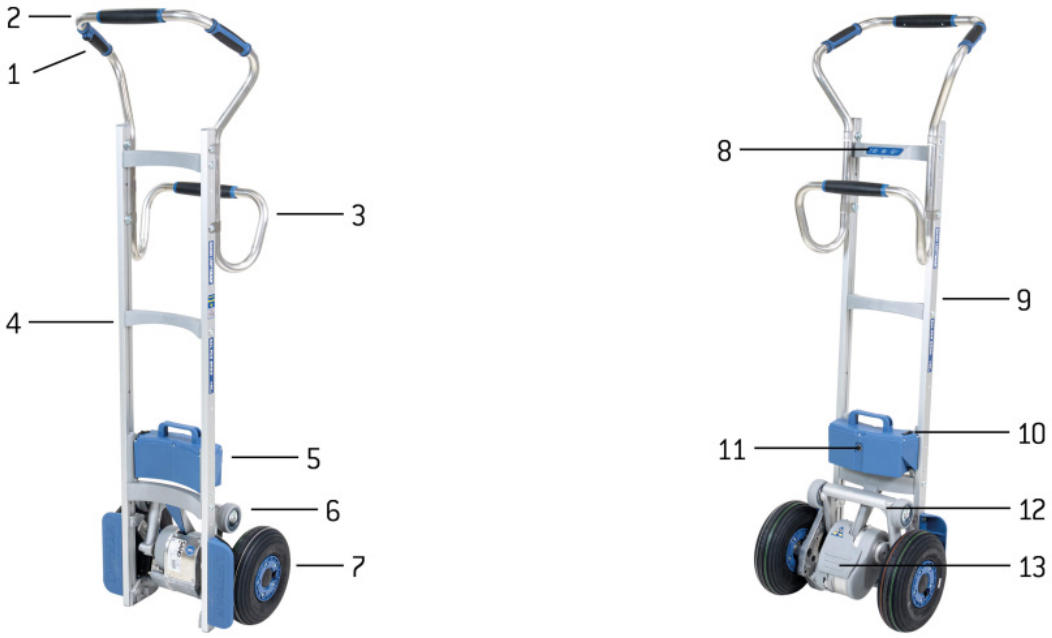

1: Up button - 2: Upper handle - 3: Lower handle - 4: Rung - 5: Quick-change battery - 6: Swing arm - 7: Main wheels - 8: Bucket - 9: Control unit - 10: Frame - 11: Charge level indicator - 12: Safety flap - 13: Lifting unit

Individual Features of the Liftkar SAL Pro Ergo:

- Upright posture and maximum control
- Beer kegs, water bottles, beverage crates, stacks of tires
- Weight: 17.4 kg (without shovel and shovel block)

2.2 MODEL UNI

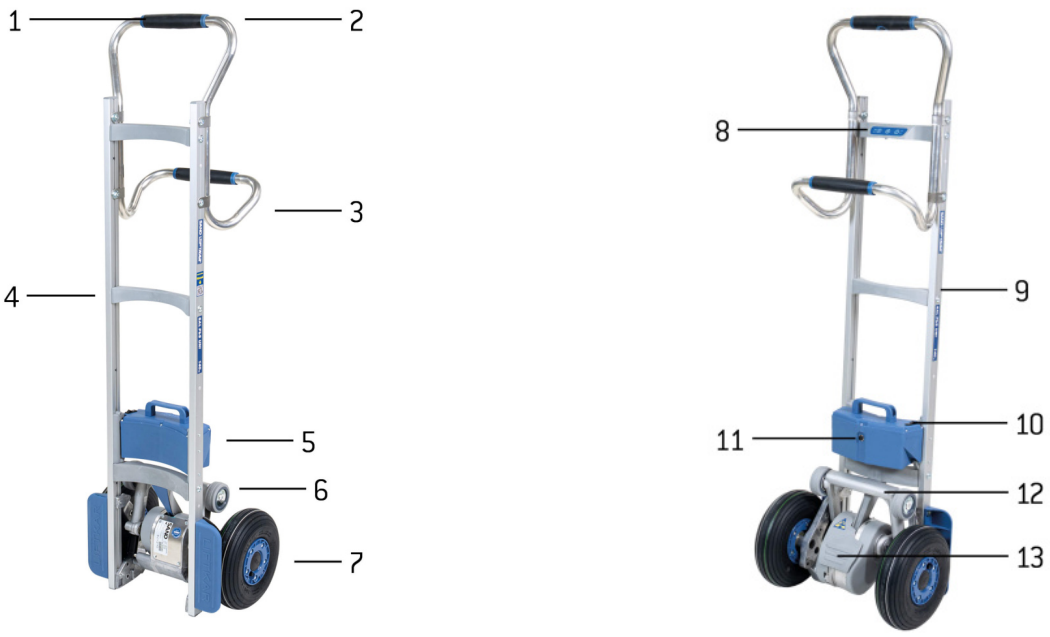

1: Up button - 2: Upper handle - 3: Frame - 4: Quick-change battery pack - 5: Swing arm - 6: Main wheels - 7: Shovel - 8: Control unit - 9: Lower handle - 10: Charging status indicator - 11: Safety flap - 12: Climber unit

Individual features of the Liftkar SAL Pro Uni:

the lightweight all-rounder for heavier loads
Copy paper, laundry containers, cupboards, roll goods
Weight: 17 kg (without bucket and bucket block)
Available for 110 kg or 140 kg loads

2.3 MODELL DR-PISTOL





1: Taster Aufwärts - 2: Oberer Griff - 3: Unterer Griff - 4: Sprosse - 5: Schnellwechselakku - 6: Schwingarm - 7: Haupträder - 8: Bedieneinheit - 9: Rahmen - 10: Hauptschalter - 11: Ladekontakt - 12: Hubeinheit - 13: Sicherheitsklappe

Individuelle Eigenschaften des Liftkar SAL Dr-Pistol:

- der leichte Allrounder für höhere Lasten
- Kopierpapier, Wäschecontainer, Schränke, Rollenware
- Gewicht: 16,8 kg (ohne Schaufel und Schaufelblock)
- für 110kg oder 140kg Lasten erhältlich

2.4 MODEL FOLD





1: Up button - 2: Upper handle - 3: Cross tube handle - 4: Frame - 5: Locking lever - 6: Quick-change battery pack - 7: Swing arm - 8: Main wheels - 9: Shovel - 10: Control unit - 11: Charging status indicator - 12: Safety flap - 13: Climber unit

Individual features of the LIFTKARS Pro FOLD:

- Foldable model variant, fits in any car trunk
- Washing machines, floor grinders, gas cylinders
- Weight: 17.3 kg (without bucket and bucket block)

2.5 MODEL FOLD-L





1: Up button - 2: Upper handle - 3: Frame - 4: Locking lever - 5: Lower handle - 6: Quick-change battery - 7: Swing arm - 8: Main wheels - 9: Bucket - 10: Cross tube handle - 11: Control unit - 12: Charge level indicator - 13: Safety flap - 14: Lifting unit

Individual characteristics of the Liftkar SAL Fold:

- Foldable model variant with a higher base frame
- Large fridges, doors, windows, counter tops, tiles
- Weight: 18,4 kg

2.6 MODELL FOLD-L DOLLY KICK-OUT





1: Taster Aufwärts - 2: Oberer Griff - 3: Griff Querrohr - 4: Dolly Kick-out Fixierung - 5: Dolly Kick-out - 6: Sprosse - 7: Schnellwechselakku - 8: Schwingarm - 9: Haupträder - 10: Feststellhebel - 11: Bedieneinheit - 12: Rahmen - 13: Hauptschalter - 14: Ladekontakt - 15: Hubeinheit - 16: Sicherheitsklappe

Individuelle Eigenschaften des SAL FOLD-L Dolly Kick Out:

- faltbare Modellvariante mit höherem Grundrahmen
- ausklappbares Dolly Kick-out Stützradsystem
- Großkühlschränke, Türen, Fenster, Küchenplatten, Fliesen
- Gewicht: 24,5 kg (ohne Schaufel und Schaufelblock)

2.7 THE SWIVEL JOINT (FOLD / FOLD-L)

The necessary friction for the rotary joint is obtained through multiple friction disks, which are compressed simultaneously on the left and right sides. The lock must be tightened sufficiently to avoid movement in use.

As a rule: The lock will be sufficiently tightened if a single operator can tilt back the load from the upright position without any handle movement.

> **SAFETY INSTRUCTION**
> With heavy loads (over 100 kg) ensure the lock is tightened especially firmly.

2.8 CONTROL UNIT

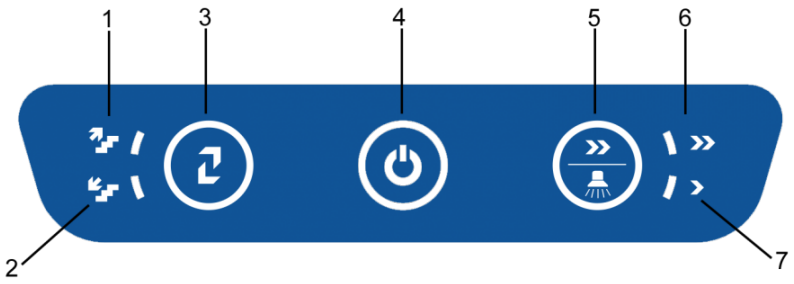

1: Up indicator - 2: Down indicator - 3 Up/Down button - 4: ON/OFF button / Status indicator - 5: Speed button / Stair light - 6: Speed indicator fast - 7: Speed indicator slow

2.8.1 BUTTON FOR ASCENDING / DESCENDING

Briefly press the push button to switch the LIFTKAR SAL to ascent mode or descent mode.

2.8.2 ON/OFF BUTTON / STATUS INDICATOR

- **Green light on:** The LIFTKAR is switched on. (In up mode, the button in the handlebar is active. The climber mechanism switches on when the button is pressed and stops when it is released - see also chapter Operation 4.1)
- **Constantly red:** The LIFTKAR is in descent mode and the support wheels move (fast) to the descend position (takes a max. of 0.5 seconds – refer also to chapter 4.2)
- **Flashing red:** The LIFTKAR is overloaded. (Flashes for 3 seconds and goes out – see also chapter 4.3.3)
- **Alternating red and green:** the battery pack is running low and urgently needs to be recharged. It is recommended that you move down stairs and either change the battery pack or recharge it with the quick charger supplied.

2.8.3 BEEP FEATURE

This is a people warning feature for transports in public areas.

Activating the beeper function: Switch on the stairclimber and press and hold the On/Off button for about 30 seconds until a beep signal sounds. Now, the beep signal remains on while the stairclimber is moving.

Deactivating the beeper function: Switch on the stairclimber and press and hold the On/Off button for about 30 seconds until a beep signal sounds. Now, the stairclimber continues to move without the recurring beep sound.

2.8.4 SPEED SWITCH

Use the speed switch to select either high or low speed – this can only be used in ascent mode. (In descent mode the descending speed is permanently set so that optimum braking will always be secured – refer also chapter 4.2)

Low speed is advisable for: training, heavy loads and in awkward locations.

Press the speed button for approx. 10 seconds to activate the stair light.

2.9 ASCEND BUTTON IN UPPER HANDLE

This button is only active in the ascent mode and switches the lifting mechanism on and off.

2.10 SAFETY FLAP

To start tilting a load, it may be necessary to use your foot to assist in tilting. The axle of the conventional sack truck is normally used for this purpose. With the LIFTKAR SAL, the swing arm with the support wheels, a wheel, or the drive unit may be used to support by foot. The safety flap is installed to prevent your foot getting jammed in by the swing arm. If you press onto the lower part of the flap with your foot all functions will be stopped.

SAFETY INSTRUCTIONS:
You avoid all risk if you switch on only after tilting the load.

2.11 HAUPTSCHALTER

Der Hauptschalter befindet sich am Schnellwechselakku. Über den Hauptschalter wird die ganze Stromversorgung sicher abgeschaltet. Ein versehentliches Einschalten mit dem Taster P ist nicht mehr möglich.

2.12 SWITCHING OFF

Battery power is removed:

- By removing the battery
- Pressing the ON/OFF switch for longer than 3 seconds.
- Automatically after 10 minutes

The removal of the battery provides a higher degree of safety than switching off with the timer cut-out, as the ON / OFF button may be touched inadvertently.

3 FITTING AND REMOVING THE BATTERY

SCHNELLWECHSELAKKU - LITHIUM AKKU
CHARGE BATTERY BEFORE USAGE

3.1 FITTING THE BATTERY

- Align the battery pack between the guides on the frame.
- Gently press the battery pack downwards. The battery pack clicks into place.
- Your LIFTKAR is ready for use.

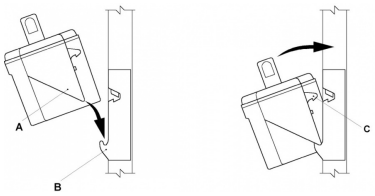

3.2 REMOVING THE BATTERY

- Pull battery safety lever
- Pull the battery upwards out of the guides.

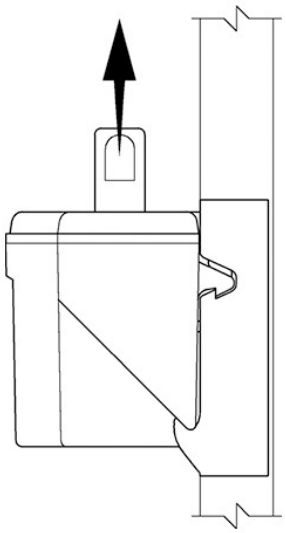

4 OPERATION

4.1 ASCENDING STAIRS

Insert the battery and press the ON/OFF button until it is constantly green.

The LIFTKAR is now in the UP MODE.

Pressing the Up button in the upper handle, will operate the support wheels and will lift the LIFTKAR over the step continuing until the button is released.

IMPORTANT

On each cycle, immediately the main wheels rest on the tread, pull the LIFTKAR back to touch the rise of the next step up.

Holding the LIFTKAR **too flat**, on stairs with open risers, can also result in the support wheels being partially trapped under the tread. This may result in excessive pressure on the drive unit, causing it to go into overload mode, and shutting down. (Reset by pressing the ON/OFF button).

4.2 DESCENDING STAIRS

Insert battery, if not already done. Press the ON/OFF button. Use the Up/Down button to switch to Down mode. The LIFTKAR is now in the DOWN-MODE and the support wheels will move to the descend position automatically (see drawing).

The ascending button is now out of function.

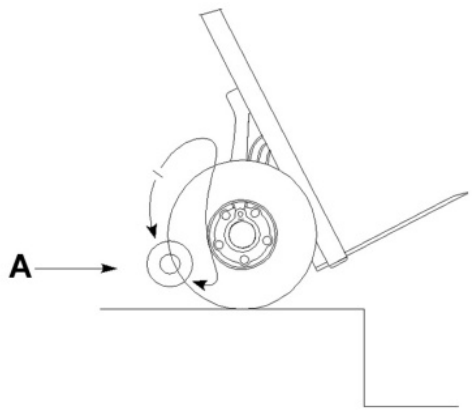

A: Descend position

With the support wheels in the descend position the LIFTKAR can be rolled over the step margin and the support wheels will, under controlled conditions, lower the machine onto the next step down.

When the main wheels land on the lower step, the support wheels automatically rotate to the descend position for the descent onto the next step down. During this short time, the status indicator lights up red and the swing arm accelerates to maximum speed.

IMPORTANT

Hold the main wheels back against the step until the status indicator lights up green again. The descend position is then reached and you can drive again.

If only a lightweight load is being transported, or if the operator holds the LIFTKAR back too much, the swing arm will only move slowly to the down position.

Just before the suspension arm reaches the descending position, the support wheels reach the upper edge of the stair and lift the LIFTKAR approximately 10 mm. This is normal and is used as an advance signal by experienced drivers. As a matter of fact, you may already advance while the support wheels are in contact with the floor. This results in smooth continuous down- the-stairs motion.

In the case of closed stairs with short step, for instance on the inside of narrow circular staircases, the support wheels may touch the stair step and the LIFTKAR can move approximately 8 to 9 cm forward. This also is normal since the LIFTKAR will then be ready for advancing again anyway.

Unlike all other stairclimbers the operator does not need to control the electrics to descend, as the support wheels operate automatically.

4.3 PLEASE PAY ATTENTION TO

4.3.1 SHIFT OF BALANCE

When ascending the balance of the load changes as soon the support wheels start lifting the load. Operators quickly become accustomed to this and compensate by tilting the handle.

Initially, before this operation becomes automatic, care should be taken at the point where the support wheels take the load when ascending. There is a forward movement of the machine which is easily compensated for by tilting the handle backwards.

Lowering backwards by 10° to 20° before the support wheels start to lift eliminates any major forward movement.

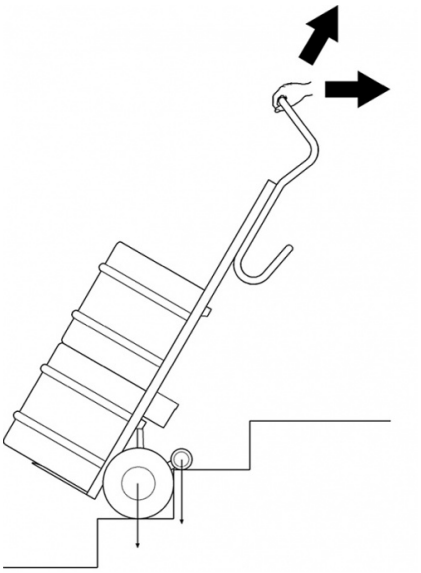

4.3.2 HOOKING IN UNDERNEATH THE STEP

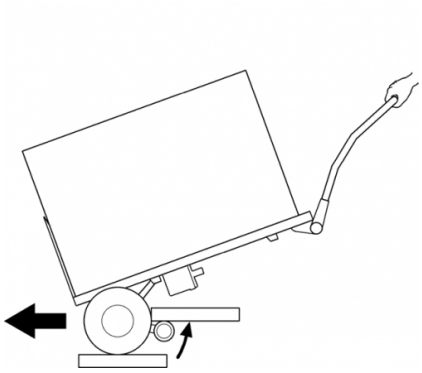

Under normal operating conditions, with the load in a well-balanced position, the moving support arm is always clear of the underside of the upper step (see chapter 4.2). If the LIFTKAR is laid back too far, the support arm will be tripped by touching the tread it is on, causing it to rotate under the upper tread. The electronics will go into overload mode and will need to be reset.

4.3.3 OVERLOAD

If the unit is overloaded the drive motor stops and the status indicator flashes red for 3 seconds before switching off. The unit has to be switched on again.

> Once the battery has been discharged the unit will go into overload even with loads below the specified capacity.

4.3.4 LIFTKAR IS NOT A RUBBER PAD

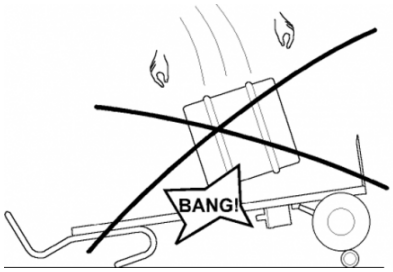

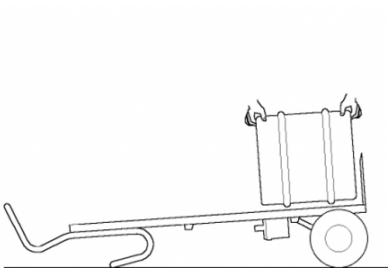

In the beverage industry drums are sometimes directly thrown from the truck onto the hand truck instead of a rubber pad or old tyre.

This is not possible with the LIFTKAR when the support wheels are in the descending position. The impact will be transmitted to the connecting bar via the drive unit, which may result in fracture. With the support wheels raised between the main wheels, throwing barrels on the unit is possible in principle since the pneumatic tyres would absorb part of the impact, it is nevertheless not recommended as it detrimental to service life.

4.3.5 FAILURE TO NEGOTIATE STEPS "SQUARE-ON"

Failure to negotiate steps "square-on" will result in damage to the underside of the drive unit.

4.3.6 DRIVING ON A WINDING STAIRCASE

Please observe the following points when operating the stairclimber on spiral staircases:

The LIFTKAR moves inwards when climbing up, so:
For climbing UP start on the outside of the staircase.

The LIFTKAR moves outwards when going down, so:
For climbing DOWN start on the inside.

If you do start moving too close to the banisters/wall then shift the unit to the side by reversing (on a landing or wider step if possible) and start again at a tighter angle.

4.3.7 OPTIMALE EINSTELLUNG DER SCHWERPUNKTLAGE

Für eine optimale Lastverteilung auf dem Treppensteiger versuchen Sie den Lastschwerpunkt ca. auf Höhe des Akkus zu legen.

Bei niedrigen, kompakten Lasten hilft es beispielsweise die Last auf eine Palette zu stellen und mit der Palette auf dem Treppensteiger zu transportieren. Damit kann der Lastschwerpunkt weiter hinauf verlagert werden.

Bei der Modellreihe FOLD stellen Sie bei niedrigen Lasten den Griffbügel nach vorne.

5 QUICK-CHANGE BATTERY

- The charger automatically switches to trickle charging so overcharging is not possible.
- Do not leave the battery discharged or half discharged. Always charge immediately after use.
- The optimum temperature for charging is 20 – 25 °C. Too cold or too warm has a negative effect on the capacity.
- Operating and Charging Temperature: For unrestricted functionality, the cell temperature of the battery must always be kept above 0°C. Therefore, we recommend storing the battery between +5°C and +25°C.

		Lithium-ion battery	Stair climber
Operating temperature	°C	0 ... +40	-10 ... +40
Charging temperature	°C	0 ... +40	-

If the battery has not been fully charged or tends to lose charge too rapidly, this will not only reduce the speed of the LIFTKAR but also reduce the capacity. It may move into the overload mode as a result, even with light loads. See Operation 4.3.3.

Charging time: approx. 4.5 h depending on charge level

5.1 BATTERY CHARGER

The battery charger supplied is extremely powerful. An LED display gives a clear indication of charging status. The charge indicator gives you an idea whether the battery pack is fully charged or not. It is worth checking that the battery pack is fully charged before using the Liftkar.



The charge status is displayed as follows by a LED:

- If the LED is lit continuous red the battery pack is being charged.
- If the LED is lit continuous green the battery pack is fully charged. The charger can be left connected to the batteries after full charge (green light), without harming the batteries. The charger uses minimum power in this stand-by mode, (after battery is fully charged), maintains the batteries at full charge and extends battery life. This is accomplished with electronic circuitry that controls and regulates the amount of charging current that is sent from the charger to the battery being charged.

5.1.1 TECHNICAL DATA

Mains voltage supply (50/60 Hz, 1,8 A (max)): 100-240 V AC

Nominal rating (input): 24 W

Charging voltage: 24 V DC

Theoretical charging current: 2,0 A

Safety approval: cUL, CE

SAFETY GUIDELINES

Please note the following:



- Protect against moisture.
- Do not pull the plug out of the socket by its cord.
- Never use the charger unit if it has a damaged cable or plug, replace it immediately.
- The device should be connected directly to a power supply, never use an extension cord.
- The device is intended for indoor use only, it should never be exposed to rain.
- If the performance of the battery decreases significantly, it is time to replace the battery.
- Store the charger in a cool and dry place when not in use.
- Disconnect the device from the mains before inserting or removing the battery from the stairclimber.
- Warning: explosive gases. Protect from fire and sparks. Ensure the room is well ventilated during charging.
- During charging, the battery must be in a well-ventilated room.
- Children are not able to correctly assess the dangers of electrical devices. Do not allow children or infirm persons to use electrical devices without supervision.
- The device is not intended for use by children, infirm persons, or persons with insufficient knowledge, unless they are supervised or given sufficient training. Make sure that children do not play with the device.
- The device may only charge batteries that comply with EN directives (and show a CE or GS mark).

5.1.2 USE ONLY FOR THE PURPOSE INTENDED

- The charger is designed exclusively for charging the original lithium ion rechargeable batteries.

5.1.3 CE MARK FOR CHARGER UNITS

The charger units fulfil the criteria laid down in the low-voltage and electromagnetic compatibility directive and are therefore designated with the CE sign.

---

6 ACCESSORIES AND OPTIONS

A continuously growing list of accessories and options is available. For instance, different toe plate sizes, securing straps, in-transit charger, different frame heights, fixed or hinged toe plate.

7 DISPOSAL

Liftkar SAL stairclimbers are durable products. At the end of their useful life the stairclimber components and charger should be disposed of properly. Make sure the materials are separated carefully for disposal in line with the material codes relating to each component.

The stairclimber does not contain any hazardous materials and is fully recycling-compatible. The printed circuit boards and the rechargeable battery must be disposed of using a suitable recycling process.

Do not simply dispose of the battery pack in a household dustbin, however. If there are any further questions, please ask your specialist dealer.

Sano can organise professional disposal of the whole stairclimber unit, against payment, if required.

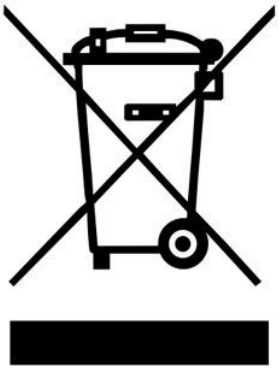

8 WARRANTY AND LIABILITY

Liftkar SAL stairclimbers are durable products. At the end of their useful life the stairclimber components and charger should be disposed of properly. Make sure the materials are separated carefully for disposal in line with the material codes relating to each component.

The stairclimber does not contain any hazardous materials and is fully recycling-compatible. The printed circuit boards and the rechargeable battery must be disposed of using a suitable recycling process.

Do not simply dispose of the battery pack in a household dustbin, however. If there are any further questions, please ask your specialist dealer.

Sano can organise professional disposal of the whole stairclimber unit, against payment, if required.

8.1 WARRANTY

The warranty period for the LIFTKAR is 12 months from the date of purchase and covers defective material and production faults

Not included in the warranty are:

- Normal wear and tear on parts
- Damage resulting from abnormal load
- Damage due to the exertion of force
- Inadmissible modifications to the unit or accessory parts

8.2 LIABILITY

SANO Transportgeraete GmbH as manufacturer is not responsible for the safety of the LIFTKAR SAL if:

- the LIFTKAR SAL is used other than is intended,
- repairs, installation or other work have been carried out by unauthorised persons.
- the instructions in these Operating Instructions are not observed
- non-original parts are installed or connected with the LIFTKAR SAL
- original parts are removed.
- Recommendation for Training
  The manufacturer recommends attending product training conducted by a qualified person. **Liability disclaimer:** Failure to undertake the recommended training absolves the manufacturer of any liability for damages to the device, personal injury, or property damage resulting from improper or incorrect operation.

9 CE DECLARATION OF CONFORMITY / DESIGN PROTECTION BY PATENTS

9.1 CE DECLARATION OF CONFORMITY

CE

SANO Transportgeraete GmbH declares that the LIFTKAR SAL stair trolley corresponds to the applicable basic safety and health requirements of the EC guidelines for machines 2006/42/EEC, appendix IIA. This declaration will lose its validity if changes are performed on the unit without our approval.



Jochum Bierma (Ing.), Managing Director

9.2 DESIGN PROTECTION BY PATENTS

The lifting system of the SAL series is protected by international patent applications for Europe, USA and Japan. The modular structure of the basic frame is also protected by a patent application. Also, for the rotary joint of the FOLD model patent is pending.

NOTE

CONTACT

SANO Transportgeraete GmbH
Gewerbezeile 15
4040 Lichtenberg / Linz
Austria

Tel. +43 7239 / 510 10
Fax +43 7239 / 510 10 14
office@sano.at

www.sano.at

SANO Deutschland GmbH
Geigelsteinstraße 10
83080 Oberaudorf
Germany

Tel. +49 8033 / 308 96 0
Fax +49 8033 / 308 96 17
info@sano-treppensteiger.de

www.sano-treppensteiger.de

SANO UK Powered Stairclimbers Ltd.
Bristol Court, Betts Avenue
Martlesham Heath
Ipswich, Suffolk / IP5 3RY, England

Tel. +44 1473 / 333 889
Fax +44 1473 / 333 742
info@sano-uk.com

www.sano-uk.com

Changes without notice / LIFTKAR SAL 2022-10

www.sano.at