LIFTKAR HD

HD UNI / HD FOLD / HD DOLLY / HD FOLD DOLLY



INSTRUCTION MANUAL

English

SANO makes life easier.

INTRODUCTION **3**

1 SAFETY GUIDELINES / TECHNICAL DATA **4**

1.1 General safety guidelines 4
1.2 Built-in safety features (depending on model) 4
1.3 Technical data LIFTKAR HD models 6
1.4 Technical data of quick-change battery unit 6

2 CONTROL FEATURES **7**

2.1 UNI model 7
2.2 Fold model 8
2.3 Dolly model 9
2.4 Fold Dolly model 10
2.5 Control unit 11
2.6 UP/DOWN switch on handlebar 12
2.7 Main switch 12
2.8 Switching off 13

3 FITTING AND REMOVING QUICK-CHANGE BATTERY PACK **14**

3.1 Fitting battery pack 14
3.2 Removing battery pack 14

4 OPERATION **15**

4.1 Climbing UP stairs 15
4.2 Climbing DOWN stairs 15

5 HOW THE LIFTKAR EDGE BRAKING SYSTEM WORKS **16**

5.1 Enabling the system 16
5.2 Deactivating and blocking the edge braking system 17
5.3 Automatic switch-off after extended period of no operation 17
5.4 How to test the step edge braking system 18

6 CHARGING THE QUICK-CHANGE BATTERY PACK **18**

6.1 Charger unit 19

7 ACCESSORIES AND OPTIONS **20**

8 DISPOSAL **20**

9 WARRANTY AND PRODUCT LIABILITY **21**

9.1 Warranty 21
9.2 Liability 21

10 CE DECLARATION OF CONFORMITY / PATENT REGISTERED **22**

NOTES **23**

CONTACT **24**

INTRODUCTION

CONGRATULATIONS!

WE WOULD LIKE TO CONGRATULATE YOU ON THE PURCHASE OF YOUR POWERED STAIRCLIMBER TRUCK TYPE LIFTKAR HD!

You have chosen a unit using the very latest stairclimber technology for negotiating different types of steps and stairs safely and efficiently.

Development of the LIFTKAR HD focussed especially on user safety and user friendliness.

Key features:

Two UP / DOWN switches - one on the left and one on the right of the handle unit - for perfect user comfort. Ideal for both left- and right-handed operators.

Automatic braking system that ensures the main wheels stop reliably at the edge of each step from the moment the unit is switched on.

Optimum protection against impact to the support wheels thanks to a lubricated mechanical clutch.

Additional electronic protection prevents damage due to overloading.

2 climbing speeds and two operating modes (single-step mode and continuous mode) to perfectly match your operating style.

Excellent performance on spiral staircases.

In order to update you about product news as well as technical changes (e.g. options, accessories) we ask you to register your product online.

https://www.sano-stairclimbers.com/product-registration

1 SAFETY GUIDELINES / TECHNICAL DATA

1.1 GENERAL SAFETY GUIDELINES

- Make sure nobody is located underneath the load.
- Always secure the load with the safety belt included.
- Always wear non-slip shoes. Some steps may be very smooth.
- Always wear shoes with steel toecaps.
- The Liftkar may only be operated by trained personnel.
- Never reach into the unit's transport mechanism with your hands.
- Plan each journey on the stairs according to the current situation before you start.
- Always remove the battery pack before stowing the LIFTKAR. Firstly so the LIFTKAR cannot be switched on inadvertently during transport and secondly because the LIFTKAR is 4 kg lighter without the battery pack.

1.2 BUILT-IN SAFETY FEATURES (DEPENDING ON MODEL)

Fold model:

- Each time before you use the stairclimber, make sure that the quick release lever (figure 2, chapter 2.2) on the handles is tightened properly. It must be possible to tilt the load from the standing position without assistance. The position of the handle section in relation to the frame must not be altered.

Dolly model:

- Figure A shows the protection system when retracted.
- Figure B shows the protection system when extended. The sliding arm must be at right-angles to the protection system.



A: Sliding Arm - B: Dolly-System



A: Sliding Arm - B: Dolly-System

- Each time before starting up the stairclimber, make sure that the protection system is properly folded away (retracted, figure D).



Folding away



Support system retracted

IMPORTANT

Do **not** use the protection system in the extended position while operating the stairclimber on stairs.

1.3 TECHNICAL DATA LIFTKAR HD MODELS

Model	Uni	Fold	Dolly
Load capacity	360 kg	330 kg	220 kg
Maximum climbing speed with full load (steps/min)	9-10	9-10	14-15
Maximum step height	210 mm	210 mm	210 mm

Model	Weight (incl. battery pack)
HD UNI	38 kg
HD Fold	39 kg
HD Dolly	44 kg
HD Fold Dolly	45 kg

1.4 TECHNICAL DATA OF QUICK-CHANGE BATTERY UNIT

Fuse: internal blow-out fuse (30 Amp)

Charging contact: DC Jack dia. 2,1 x 9,5

Weight of battery: 4 kg

Capacity: 5 Ah

Voltage: 24 VDC (2x 12 VDC - 5 Ah)

Type of battery: maintenance-free, leak-safe lead gel cell (approved by DOT and IATA for air freight)

2 CONTROL FEATURES

2.1 UNI MODEL



1

1: UP/DOWN switches - 2: Handles - 3: Control unit - 4: Quick-change battery pack - 5: Climbing mechanism - 6: Main wheels

2.2 FOLD MODEL



2

1: UP/DOWN switches - 2: Handles - 3: Control unit - 4: Quick release - 5: Quick-change battery pack - 6: Climbing mechanism - 7: Main wheels

2.3 DOLLY MODEL



3

1: UP/DOWN switches - 2: Handles - 3: Control unit - 4: Dolly-System - 5: Quick-change battery pack - 6: Climbing mechanism - 7: Main wheels

2.4 FOLD DOLLY MODEL



4

1: UP/DOWN switches - 2: Control unit - 3: Handles - 4: Dolly-System - 5: Quick-change battery pack - 6: Climbing mechanism - 7: Main wheels

2.5 CONTROL UNIT

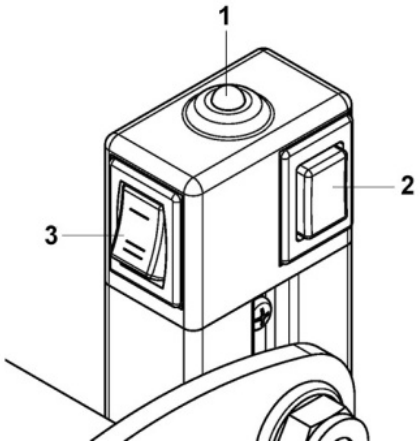

5

1: LED - 2: ON/OFF multifunction key P - 3: Speed selector

2.5.1 ON/OFF AND SINGLE-STEP/CONTINUOUS MODE MULTI-FUNCTION SWITCH (P)

- The LIFTKAR is ready for operation after the battery pack has been switched on (ON/OFF switch on power pack) and you briefly press button P. This is confirmed by the green LED display on the control unit going on. The LIFTKAR is in Single- step mode.
- If you briefly press button "P" again the unit switches to Continuous mode. This is signalled by the LED flashing green.
- Pressing the button for longer than 3 seconds switches the LIFTKAR off.

2.5.2 LED DISPLAY

- **Green light on**: LIFTKAR is in Single-step mode. Pressing one of the UP/DOWN switches (see figure 6, chapter 2.6) starts the LIFTKAR moving. The unit switches off automatically after one climbing cycle has been completed (raising or lowering the LIFTKAR one step).
- **Flashing green:** The LIFTKAR is in Continuous mode. For users with plenty of practice. The LIFTKAR starts climbing when the UP/DOWN switch is pressed and doesn't stop until the UP/DOWN switch is released.
- **Flashing red:** The LIFTKAR is overloaded. (The LED flashes for approx. 3 seconds and then goes out – see also Operation section 4.2.1.)
- **Alternating red and green:** the battery pack is running low and urgently needs to be recharged. The stairclimber will certainly manage another flight of stairs, but it is recommended that you move down stairs and either change the battery pack or recharge it with the quick charger supplied. In addition, an integrated beeper provides an acoustic signal to indicate that the battery charge is low. The beep frequency increases the lower the battery level.

IMPORTANT

Keep pressing the UP/DOWN switch in Single-step mode until the LIFTKAR reaches the next step and stops automatically. Then release the switch. Pressing the switch again starts the LIFTKAR on its next movement cycle. If the switch is released by mistake during a cycle, simply press the UP/DOWN button again to continue the movement. The Liftkar continues operating until it reaches the end of the cycle and stops automatically. Releasing the button and pressing it again starts the next climbing cycle.

2.5.3 SPEED SWITCH

Use the speed switch to select higher or lower climbing speeds (figure 5).

The lower speed or single-step mode is recommended for beginners, heavy loads and difficult situations.

2.6 UP/DOWN SWITCH ON HANDLEBAR

With an UP/DOWN switch located both on the left and right of the handlebar (figure 6), this unit is ideal for both left- and right-handed operators.

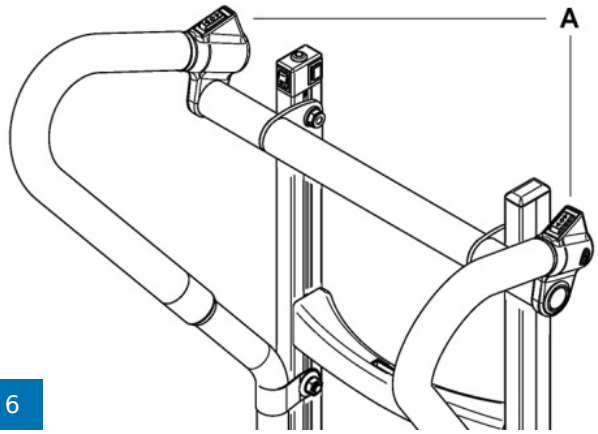

6

A: UP/DOWN switch

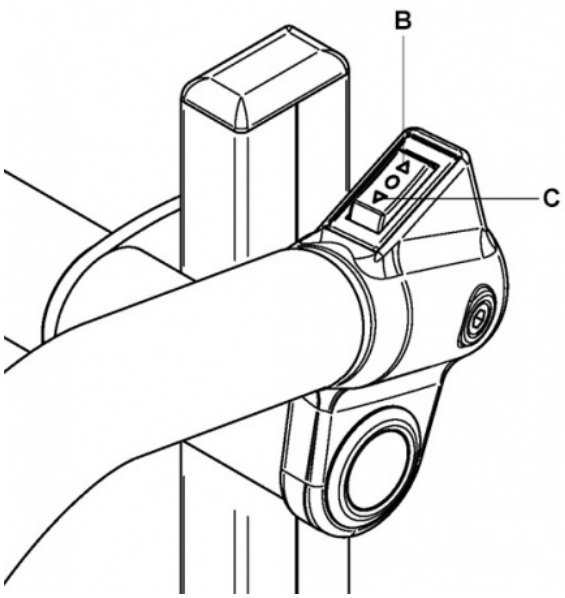

B: DOWN - C: UP

2.7 MAIN SWITCH

The main switch is located on the quick-change battery pack. The power supply to the unit can be switched off safely using the main switch (figure E).



E

2.8 SWITCHING OFF

The unit can be switched off in the following ways:

- Removing the quick-change battery pack (see section 3).
- Using the main switch on the quick-change battery pack (see figure E).
- Pressing multi-function switch P for longer than 3 seconds.
- Leaving the unit for a period of time: The LIFTKAR switches off automatically after 10 minutes.

Using the main switch or removing the battery pack provides a higher level of safety than switching off using switch P or leaving the unit to switch off automatically because switch P could easily be actuated inadvertently, causing the machine to switch on.

Always switch off the main switch on the battery pack before stowing the unit away.

3 FITTING AND REMOVING QUICK-CHANGE BATTERY PACK

3.1 FITTING BATTERY PACK

- First position corner A in hook B.
- Gently press battery pack forwards swiftly. The battery pack clicks into place.
- Set switch on battery pack to ON and your LIFTKAR is ready for operation.

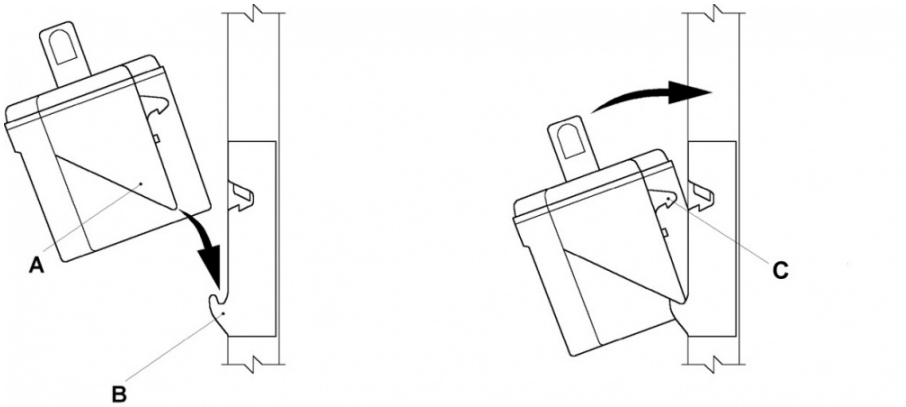

C: Latches

3.2 REMOVING BATTERY PACK

Lift the battery pack sharply upwards. It then disengages automatically.

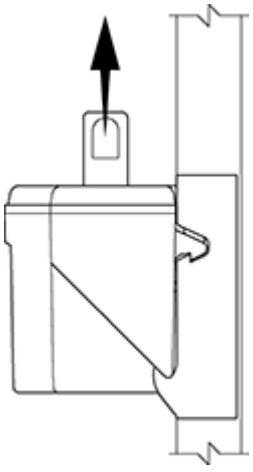

4 OPERATION

4.1 CLIMBING UP STAIRS

Fit battery pack, switch main switch to ON, press briefly on multi-function switch P until the LED display goes permanently green (Single-step mode, refer to section 2.5.1.), or flashes green (Continuous mode).

The LIFTKAR is now ready for operation.

Pressing one of the UP/DOWN switches Q (figure 6, left and right of handlebar, arrow upwards points towards operator) starts moving the lift arm with the support wheels and lifts the LIFTKAR onto the next step. The cycle is repeated until the switch is released (Continuous mode, LED flashes green). In Single-step mode the LIFTKAR stops when the main wheels reach the next step.

IMPORTANT

As soon as the main wheels have "landed" on the next step, always draw the unit away from the edge of the step and contacts the step above.

4.2 CLIMBING DOWN STAIRS

Fit battery pack, switch main switch to ON, press briefly on multi-function switch P until the LED display goes permanently green (Single-step mode, refer to section 2.5.1.), or flashes green (Continuous mode).

The LIFTKAR is now ready for operation.

Pressing one of the UP/DOWN switches Q (figure 6, left and right of handlebar, arrow downwards points away from operator) starts moving the lift arm with the support wheels and lowers the LIFTKAR onto the next step. The cycle is repeated until the switch is released (Continuous mode, LED flashes green). In Single-step mode the LIFTKAR stops when the main wheels reach the next step.

IMPORTANT

As soon as the main wheels have landed on the step, always push the Liftkar to the edge of the next step. The brake wheels stop the Liftkar reliably on the edge of the step.

4.2.1 OVERLOAD

If the unit is overloaded the drive motor stops and the LED flashes red for 3 seconds before going out. The unit has to be switched on again.

> If the power of the battery pack is running out then the overload signal will be displayed even on loads below the specified capacity.

4.2.2 THE LIFTKAR IS NOT A RUBBER MAT!

Never throw a load onto the LIFTKAR! We recommend that this kind of loading method is avoided because it causes higher wear and may damage the LIFTKAR control unit as a result of vibrations.

4.2.3 DO NOT RIDE OVER KERBS AT AN ANGLE

Always ride over kerbs or similar edges with both wheels contacting the edge at the same time. This will prevent damage to the drive unit.

4.2.4 OPERATION ON SPIRAL STAIRCASES

Please observe the following points when operating the stairclimber on spiral staircases:

The LIFTKAR moves inwards when climbing up, so:
For climbing UP start on the outside of the staircase.

The LIFTKAR moves outwards when going down, so:
For climbing DOWN start on the inside.

If you do start moving too close to the banisters/wall then shift the unit to the side by reversing (on a landing or wider step if possible) and start again at a tighter angle.

---

5 HOW THE LIFTKAR EDGE BRAKING SYSTEM WORKS

5.1 ENABLING THE SYSTEM

The edge braking system is enabled automatically as soon as the LIFTKAR is switched on using the "ON/OFF" switch (figure 5). This ensures that the brake blocks inside the rims of the main wheels block the main wheels as soon as the unit approaches the edge of a step. The brakes are released mechanically as soon as the main wheels contact the next step. The brake system remains active and engages automatically when the main wheels approach the edge of the next step.

5.2 DEACTIVATING AND BLOCKING THE EDGE BRAKING SYSTEM

The edge braking system is blocked if the LIFTKAR is switched off using the "ON/OFF" switch (figure 5 - LED is no longer green or flashing) and the unit is parked on its toe plate.
The LIFTKAR then no longer stops automatically at the edge of a step.

NOTE

It is a good idea to deactivate the brake system on uneven ground because bumps or dips in the ground would otherwise cause the main wheels to be stopped if one of both of the edge brakes were activated.

IMPORTANT

Make sure that the system is switched on again before starting each movement downwards to the next step.
This is indicated by the LED changing to green or flashing green (see section 2.5.1. for operating modes). Only then is the edge braking system enabled.

5.3 AUTOMATIC SWITCH-OFF AFTER EXTENDED PERIOD OF NO OPERATION

Please note that the LIFTKAR switches off automatically to save the battery pack after approx. 10 min without the UP/DOWN switch being pressed). The edge braking system is also deactivated (providing the unit is parked on the toe plate).

IMPORTANT

Always check the status of the LED when starting moving again after a pause (LED **must** be green or flashing green). Only then is the edge braking system engaged.

NOTE

Do I have to make sure the edge braking system is activated on every step? No, you only have to approach the edge of the step.
Hand width rule: It is enough to position the LIFTKAR roughly one hand width away from the edge of the step (distance between point main wheels contact step and edge of step, i.e. approx. 7 – 8 cm). Now you can start the next lifting cycle and the LIFTKAR will land safely on the next step.

5.4 HOW TO TEST THE STEP EDGE BRAKING SYSTEM

Correct functioning of the step edge braking system is essential for safe operation of the stairclimber.
It is therefore essential that you check the function of the step edge braking system each time before you use the stairclimber.

- Test the step edge braking system (without load):

1. Tilt the LIFTKAR back until it is at an angle of approx. 45° (figure 7).
2. Switch on the stairclimber by pressing the main switch.
3. When you push the LIFTKAR forwards the step edge braking system should engage to brake/stop the main wheels of the stairclimber.
4. If the brakes do not engage uniformly (uneven braking on left and right wheel), do not use the LIFTKAR for climbing stairs until it has been checked by an authorised Sano technician.

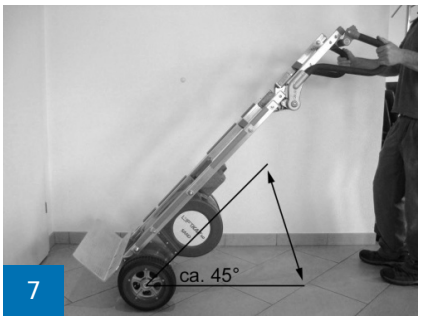

7

6 CHARGING THE QUICK-CHANGE BATTERY PACK

The lead gel cells inside the battery pack are maintenance-free, gas-tight and rechargeable. Their service life depends largely on the charging/discharging cycles. For example, it is possible to partially discharge lead batteries 1000 times, drawing more than 200 times the full capacity of the battery, providing the battery is never fully discharged.

- Avoid discharging the battery completely. Charge the battery pack as often as possible.
- Lead batteries are susceptible to self-discharging. It is therefore necessary to recharge the quick-change battery pack after 3 weeks, even if it has not been in use.
- The charger unit supplied switches over automatically to compensation charging so it is not possible to over-charge the battery.
- Do not leave the quick-change battery pack discharged or half discharged. Always recharge the battery immediately.
- If the batteries should become damaged it is possible to have them replaced in any reputable mechanical workshop. The old lead batteries are fully recyclable and are not to be disposed of.
- The ideal temperature for charging is between 20 and 25° C. Temperatures that are too cold or too hot will affect the battery's capacity.
- Operating and charging temperature: For unrestricted functionality, the cell temperature of the battery must always be kept above 0°C. Therefore, we recommend storing the battery between +5°C and +25°C.

Operating and charging temperature

		lead-gel battery	Stair climber
Operating temperature	°C	-10 ... +40	-10 ... +40
Charging temperature	°C	-10 ... +40	-

If the battery pack is not fully charged, or it looses its charge suddenly, not only will the speed of the LIFTKAR be slower, but its capacity is reduced as well. This means that overload may be displayed even with a relatively light load. See section 4.2.1.

6.1 CHARGER UNIT

The battery charger supplied is extremely powerful. An LED display gives a clear indication of charging status. The charge indicator gives you an idea whether the battery pack is fully charged or not. It is worth checking that the battery pack is fully charged before using the Liftkar.



The charge status is displayed as follows by a LED:

- If the LED is lit continuous red the battery pack is being charged.
- If the LED is lit continuous green the battery pack is fully charged. The charger can be left connected to the batteries after full charge (green light), without harming the batteries. The charger uses minimum power in this stand-by mode, (after battery is fully charged), maintains the batteries at full charge and extends battery life. This is accomplished with electronic circuitry that controls and regulates the amount of charging current that is sent from the charger to the battery being charged.

6.1.1 TECHNICAL DATA

Mains voltage supply (50/60 Hz, 0,7A): 100-240 V AC

Nominal rating (input): 24 W

Charging voltage: 24 V DC

Theoretical charging current: 1,0

Protection class: IPX4

Safety approval: UL, cUL, CE

6.1.2 SAFETY GUIDELINES

Please note the following:

- Protect against damp
- Only charge in a well ventilated room
- Do not pull the plug out of the socket by its cord
- Do not operate charger with damaged cord or plug - replace immediately!

6.1.3 USE ONLY FOR THE PURPOSE INTENDED

- The charger unit is designed exclusively for charging **lead-acid batteries containing liquid, gel-type and fabric-type electrolyte**
- It is not permissible to charge NiCd or NiMH batteries or primary cells.

---

7 ACCESSORIES AND OPTIONS

A full range of accessories and options is available. The list includes various sizes of toe plate, add-on toe plates with castors, safety belts, vehicle chargers for charging in transit, and much more. Please ask your dealer.

8 DISPOSAL

Liftkar HD stairclimbers are durable products. At the end of their useful life the stairclimber components and charger should be disposed of properly. Make sure the materials are separated carefully for disposal in line with the material codes relating to each component.

The stairclimber does not contain any hazardous materials and is fully recycling-compatible. The printed circuit boards and the rechargeable battery must be disposed of using a suitable recycling process.

Do not simply dispose of the battery pack in a household dustbin, however. If there are any further questions, please ask your specialist dealer.

Sano can organise professional disposal of the whole stairclimber unit, against payment, if required.

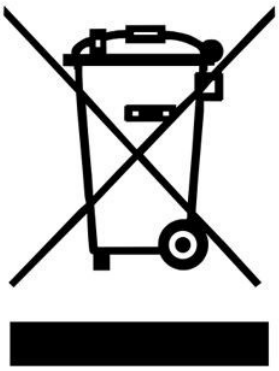

9 WARRANTY AND PRODUCT LIABILITY

9.1 WARRANTY

The warranty period for the LIFTKAR is 12 months (6 months for battery packs) from the date of purchase and covers material flaws and manufacturing errors.

The warranty does not include:

- wear parts
- damage that occurs from using the unit for a purpose it was not intended
- forcible damage
- unauthorised modifications to the unit or accessories

9.2 LIABILITY

SANO Transportgeraete GmbH is not responsible for the safety of the LIFTKAR HD if:

- the LIFTKAR HD is used for a purpose for which it is not intended.
- repairs, installation or other work have been carried out by unauthorised persons.
- the instructions in this manual are not complied with.
- non-Sano components are fitted or linked to the LIFTKAR HD.
- original components are removed.
- Recommendation for Training
  The manufacturer recommends attending product training conducted by a qualified person. **Liability disclaimer:** Failure to undertake the recommended training absolves the manufacturer of any liability for damages to the device, personal injury, or property damage resulting from improper or incorrect operation.

10 CE DECLARATION OF CONFORMITY / PATENT REGISTERED

10.1 CE DECLARATION OF CONFORMITY

SANO Transportgeraete GmbH declares that the LIFTKAR HD stairclimber fully complies with the relevant health and safety specifications laid down in the EU directive for machines 2006/42/EG, appendix IIA. Any changes made to the product without our prior consent render this declaration void.



Jochum Bierma (Ing.), Managing Director

10.2 PATENT REGISTERED

The modular design of the base frame is legally protected by a patent.

NOTES

CONTACT

SANO Transportgeraete GmbH
Gewerbezeile 15
4040 Linz, Austria

Phone: +43 7239 51010 100
Fax: +43 7239 51010 001

office@sano.at

SANO Deutschland GmbH
Geigelsteinstraße 10
83080 Oberaudorf
Germany

Tel. +49 8033 / 308 96 0
Fax +49 8033 / 308 96 17
info@sano-treppensteiger.de

www.sano-treppensteiger.de

SANO UK Powered Stairclimbers Ltd.
Bristol Court, Betts Avenue
Martlesham Heath
Ipswich, Suffolk / IP5 3RY, England

Tel. +44 1473 / 333 889
Fax +44 1473 / 333 742
info@sano-uk.com

www.sano-uk.com

Subject to updates / LIFTKAR HD 2022-10