# LIFTKAR SAL

SAL UNI / SAL ERGO / SAL FOLD / SAL FOLD-L




INSTRUCTION MANUAL

English

SANO makes life easier.

**INTRODUCTION** ..... **3**

**1 SAFETY GUIDELINES / TECHNICAL DATA** ..... **3**

1.1 General safety guidelines ..... 3
1.2 Technical data of the LIFTKAR SAL ..... 4
1.3 Technical data of the snap on battery ..... 4

**2 CONTROLS** ..... **5**

2.1 Model ERGO ..... 5
2.2 Model FOLD / FOLD-L ..... 6
2.3 Model UNI ..... 7
2.4 Control box ..... 8
2.5 Ascend button in upper handle ..... 9
2.6 Safety flap ..... 9
2.7 Switching off ..... 9
2.8 Main switch ..... 10

**3 FITTING AND REMOVING THE BATTERY** ..... **10**

3.1 Fitting the battery ..... 10
3.2 Removing the battery ..... 11

**4 OPERATION** ..... **11**

4.1 Ascending stairs ..... 11
4.2 Descending stairs ..... 12
4.3 Please pay attention to ..... 13

**5 CHARGING THE BATTERY** ..... **16**

5.1 Battery charger ..... 16

**6 ACCESSORIES AND OPTIONS** ..... **17**

**7 DISPOSAL** ..... **18**

**8 WARRANTY AND LIABILITY** ..... **18**

8.1 Warranty ..... 18
8.2 Liability ..... 19

**9 CE DECLARATION OF CONFORMITY / DESIGN PROTECTION BY PATENTS** ..... **19**

**CONTACT** ..... **20**

# INTRODUCTION

## CONGRATULATIONS!

With the new LIFTKAR SAL you have purchased a handy modular–designed sack truck with an unladen weight of only 16kg. Once you fit the snap-on battery, this simple sack truck becomes a versatile all- rounder: a normal sack truck for general use on level ground and a powered stair climber for use on steps and stairs. Additional features, such as the wide pneumatic tyres (also available in puncture proof), make this equal to any conventional hand truck for use outdoors and for professional deliveries but with the added bonus of going up steps and stairs as well.

With the SAL Series climbing stairs has been reduced to the essential: The LIFTKAR pulls itself up onto the step above and lifts to only the necessary step height. During descent, the motor acts like an electric brake and the load is brought down without “bumping”. It is also ideal for winding staircases and across tight landings.

The LIFTKAR SAL has a mechanical clutch which will prevent damage if the unit is used to descend the stairs with the controls in the ascent position. The unit also features electronic overload protection preventing ascent with too heavy a load.

The Liftkar SAL has two ascending speed settings (slow and fast – with a speed of up to 48 stairs per minute), plus a wide variety of model options, lifting capacities and additional accessories.
In other words, a professional for professionals!

In order to update you about product news as well as technical changes (e.g. options, accessories) we ask you to register your product online.

https://www.sano-stairclimbers.com/product-registration

# 1 SAFETY GUIDELINES / TECHNICAL DATA

## 1.1 GENERAL SAFETY GUIDELINES

- Always ensure that there is no one beneath the load
- Always secure the load with the appropriate straps or other accessories
- Always wear skid-proof shoes. Some stairs can be extremely slippery
- Always wear shoes with steel caps
- Never reach into the lifting mechanism with your hands if the battery is inserted
- At first practice using Liftkar SAL either unladen or with a light load of 20 – 30 kgs
- For transportation remove battery to lighten the unit and to prevent accidental operation in transit



**HERSTELLER**
Manufacturer



**HERSTELLUNGSDATUM**
Date of manufacture

**SERIENNUMMER**

Serial number

**TROCKEN AUFBEWAHREN**

Keep dry

**TEMPERATURGRENZWERTE ANWENDUNGSBEREICH 5 º C BIS 40 º C**

Temperature limit Range of application

5 º C till 40 º C (41 º F till 104 º F)

**GEBRAUCHSANWEISUNG BEACHTEN**

Consult instructions for use

**CE-KENNZEICHNUNG**

CE-Marking

**SERBISCHE CE-KENNZEICHEN**

Serbian CE-Marking

**ELEKTROSCHROTT**

Electronic Waste

## 1.2 TECHNICAL DATA OF THE LIFTKAR SAL

| Model ... ERGO/UNI/FOLD/FOLD-L | SAL 110 | SAL 140 | SAL 170 |
|---|---|---|---|
| Capacity | 110 kg | 140 kg | 170 kg |
| Maximum climbing speed | 48 steps/min | 35 steps/min | 29 steps/min |
| Weight | 16 kg | | |
| Maximum step height | 210 mm | | |

## 1.3 TECHNICAL DATA OF THE SNAP ON BATTERY

Fuse: internal blow-out fuse (30 Amp)

Plug-socket for charger: DC-Jack ø 2,1 x 9,5

Weight: 4 kg

Capacity: 5 Ah

Voltage: 24 VDC (2x 12 VDC - 5 Ah)

Battery cells: Sealed lead-acid maintenance free and approved for air travel by DOT and IATA

# 2 CONTROLS

## 2.1 MODEL ERGO

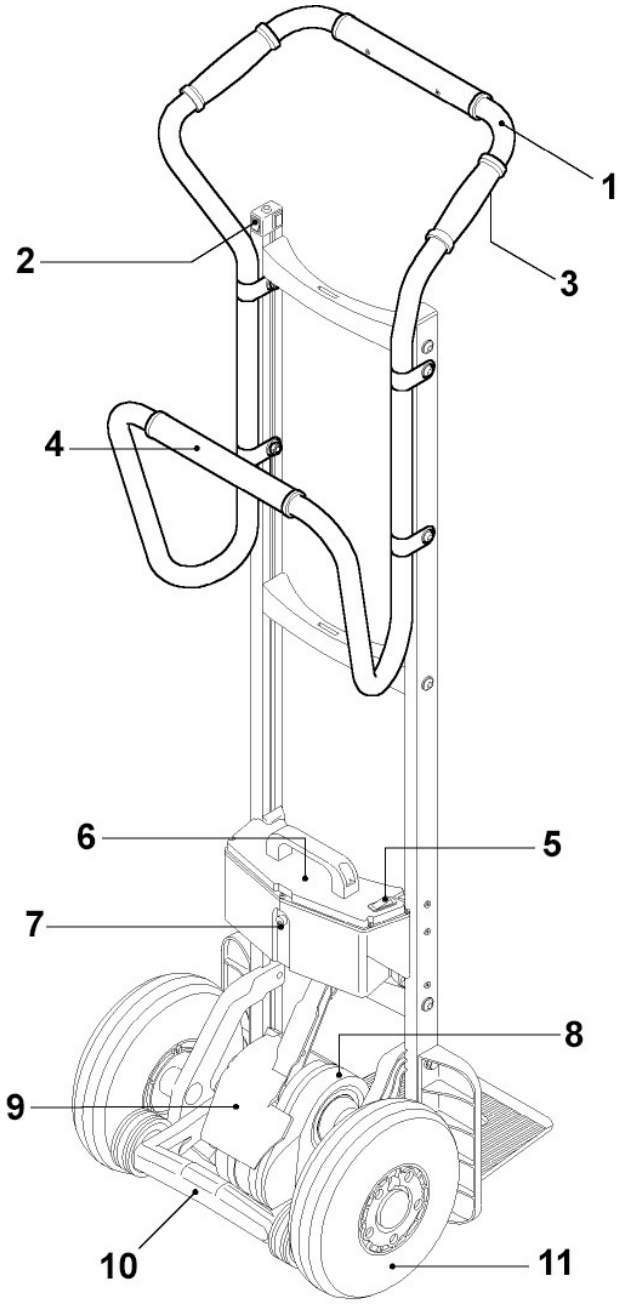


1: Upper handle - 2: Control box (see chapter 2.4) - 3: Ascending button (Q) - 4: Lower handle - 5: Main switch - 6: Snap on battery - 7: Plug socket - 8: Drive unit - 9: Safety flap - 10: Swing arm with support wheels braked in forward direction - 11: Main wheels

## 2.2 MODEL FOLD / FOLD-L

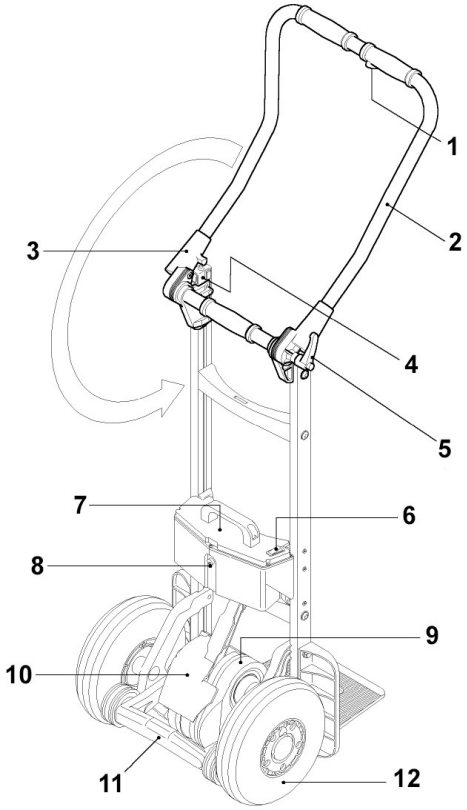


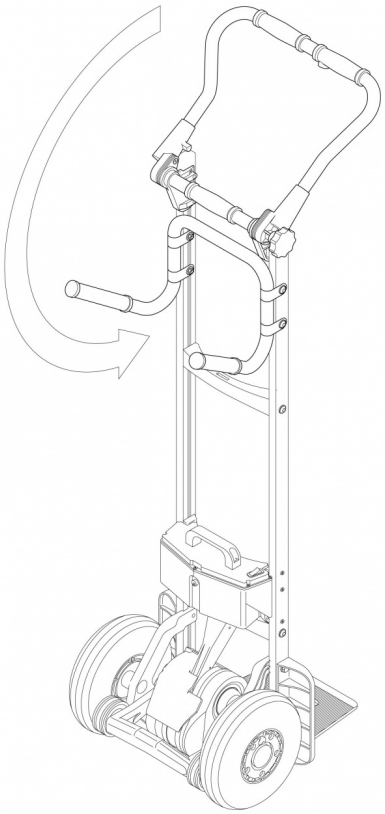

1: Ascending button (Q) - 2: Handle - 3: Swivel joint - 4: Control box (see chapter 2.4) - 5: Locking handle - 6:  Main switch - 7: Snap on battery - 8: Plug socket - 9: Drive unit - 10: Safety flap - 11: Swing arm with support wheels braked in forward direction - 12: Main wheels

### 2.2.1 THE SWIVEL JOINT

The necessary friction for the rotary joint is obtained through multiple friction disks, which are compressed simultaneously on the left and right sides. The lock must be tightened sufficiently to avoid movement in use.

**As a rule:** The lock will be sufficiently tightened if a single operator can tilt back the load from the upright position without any handle movement.

**SAFETY INSTRUCTION:**
With heavy loads (over 100 kg) ensure the lock is tightened especially firmly.

## 2.3 MODEL UNI

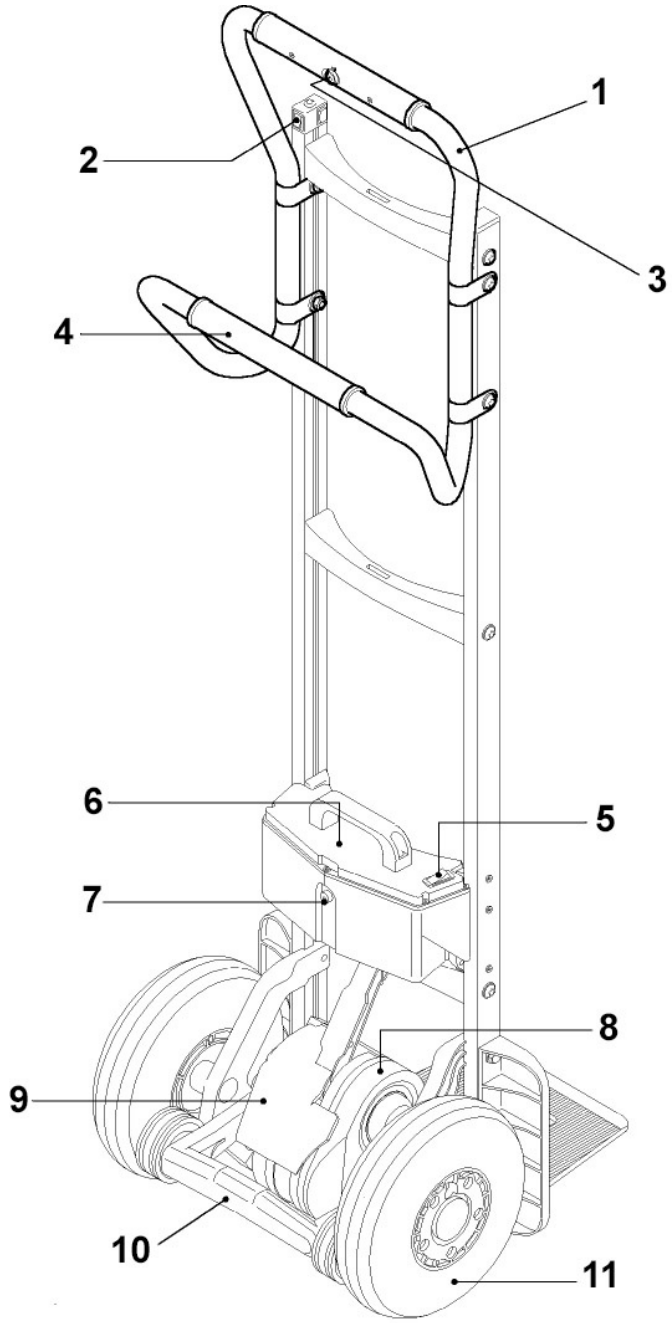


1: Upper handle - 2: Control box (see chapter 2.4) - 3: Ascending button (Q) - 4: Lower handle - 5: Main switch - 6: Snap on battery - 7: Plug socket - 8: Drive unit - 9: Safety flap - 10: Swing arm with support wheels braked in forward direction - 11: Main wheels

## 2.4 CONTROL BOX

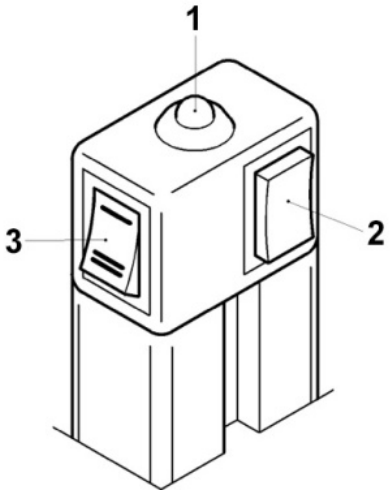


1: Indicator light - 2: On/Off/Ascend/ Descend button (P) - 3: Speed switch

### 2.4.1 BUTTON (P) FOR ASCENDING / DESCENDING

- Briefly press the push button to switch the LIFTKAR SAL to ascent mode or descent mode. See section 4.1.
- If the button is pressed for more than 3 seconds, the LIFTKAR SAL will switch off.

### 2.4.2 INDICATOR LIGHT

- **Shines green:** The LIFTKAR SAL is in ascent mode. (In the ascent mode the push button Q in the handle bar is active. The lifting mechanism operates when the push button Q is pressed and stops when released (refer also chapter 4.1)
- **Flashing green:** The LIFTKAR is in descent mode. (The push button Q is not active now – refer also to chapter 4.2)
- **Constantly red:** The LIFTKAR is in descent mode and the support wheels move (fast) to the descend position (takes a max. of 0.5 seconds – refer also to chapter 4.2)
- **Flashing red:** The LIFTKAR is overloaded. (Flashes for 3 seconds and goes out – see also chapter 4.3.3)
- **Alternating red and green:** the battery pack is running low and urgently needs to be recharged. The stairclimber will certainly manage another flight of stairs, but it is recommended that you move down stairs and either change the battery pack or recharge it with the quick charger supplied.

### 2.4.3 BEEP FEATURE

This is a people warning feature for transports in public areas.

**How to activate the Beep feature:** Turn on the device and hold down the On-/Off- /Ascend-/Descend – button (P) for about 30 seconds until you can hear a beep signal. Now the recurring beep signal is available while you are driving with the SAL.

**How to disable the Beep feature:** Turn on the device and hold down the On-/Off- /Ascend-/Descend – button (P) for about 30 seconds until you can hear a beep signal. Afterwards you can drive without the recurring beep signal.

### 2.4.4 SPEED SWITCH

Use the speed switch to select either high or low speed – this can only be used in ascent mode. (In descent mode the descending speed is permanently set so that optimum braking will always be secured – refer also chapter 4.2)

Low speed is advisable for: training, heavy loads and in awkward locations.

---

## 2.5 ASCEND BUTTON IN UPPER HANDLE

This button [Q] is only active in the ascent mode and switches the lifting mechanism on and off.

---

## 2.6 SAFETY FLAP

To start tilting a load, it may be necessary to use your foot to assist in tilting. The axle of the conventional sack truck is normally used for this purpose. With the LIFTKAR SAL, the swing arm with the support wheels, a wheel, or the drive unit may be used to support by foot. The safety flap is installed to prevent your foot getting jammed in by the swing arm. If you press onto the lower part of the flap with your foot all functions will be stopped.

**SAFETY INSTRUCTIONS:**
You avoid all risk if you switch on only after tilting the load.

---

## 2.7 SWITCHING OFF

Battery power is removed:

- By switching off the main switch on the battery unit
- By removing the battery
- By pressing button (P) for 3 seconds
- Automatically after 10 minutes

> The main switch or removal of the battery provide a higher degree of safety than switching off with the button P or with the timer cut-out, as button P may be touched inadvertently.

## 2.8 MAIN SWITCH

The main switch is situated on the battery cover. The power supply is switched on or off by way of the main switch.

# 3 FITTING AND REMOVING THE BATTERY

## 3.1 FITTING THE BATTERY

1. Locate corner "A" on both sides into hook "B" on frame
2. Snap battery forward to engage locking hooks
3. Main switch on the battery to 1 and your LIFTKAR is ready for use.

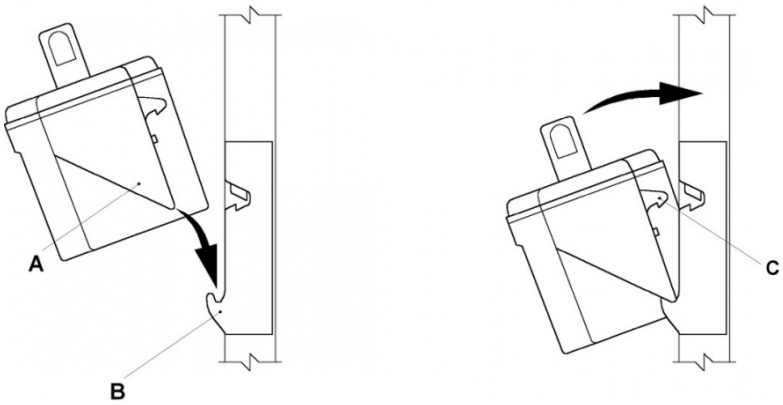


C: Locking hook

## 3.2 REMOVING THE BATTERY

Battery must be lifted vertically to disengage locking hook. Do not hinge back.

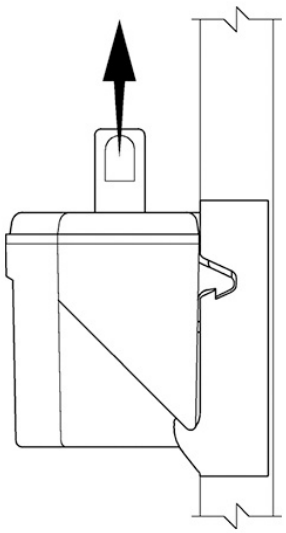

# 4 OPERATION

## 4.1 ASCENDING STAIRS

Fit the battery, put main switch on 1 and press button (P) briefly until the indicator light shines green continuously. The LIFTKAR is now in the UP MODE.

Pressing button (Q) in the upper handle, will operate the support wheels and will lift the LIFTKAR over the step continuing until the button is released.

**IMPORTANT**

On each cycle, immediately the main wheels rest on the tread, pull the LIFTKAR back to touch the rise of the next step up.

Holding the LIFTKAR **too flat**, on stairs with open risers, can also result in the support wheels being partially trapped under the tread. This may result in excessive pressure on the drive unit, causing it to go into overload mode, and shutting down. Press button (P) to reset.

## 4.2 DESCENDING STAIRS

(Fit battery and put main switch on 1.) Press button (P) briefly again until the indicator light flashes green. The LIFTKAR is now in the DOWN-MODE and the support wheels will move to the descend position automatically (see drawing).

**The ascending button Q is now out of function.**

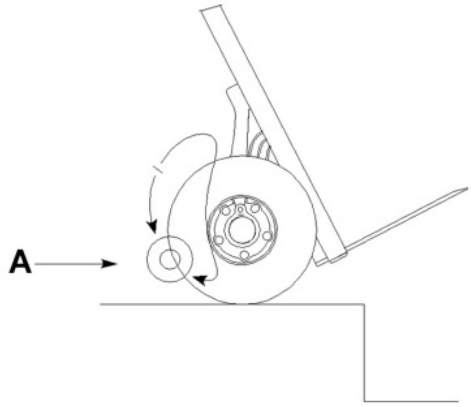


A: Descend position

With the support wheels in the descend position the LIFTKAR can be rolled over the step margin and the support wheels will, under controlled conditions, lower the machine onto the next step down. When the main wheels land on the lower step, the support wheels automatically rotate to the descend position for the descent onto the next step down, all within approx. half a second.

During the descent movement the indicator light changes to constant red. After reaching the descend position the light changes back to flashing green.

**IMPORTANT**

As soon as the LIFTKAR rolls off the tread, ensure the main wheels are kept against the rise until the support wheels reach the descend position.

If only a lightweight load is being transported, or if the operator holds the LIFTKAR back too much, the swing arm will only move slowly to the down position.

Just before the suspension arm reaches the descending position, the support wheels reach the upper edge of the stair and lift the LIFTKAR approximately 10 mm. This is normal and is used as an advance signal by experienced drivers. As a matter of fact, you may already advance while the support wheels are in contact with the floor. This results in smooth continuous down- the-stairs motion.

In the case of closed stairs with short step, for instance on the inside of narrow circular staircases, the support wheels may touch the stair step and the LIFTKAR can move approximately 8 to 9 cm forward. This also is normal since the LIFTKAR will then be ready for advancing again anyway.

Unlike all other stairclimbers the operator does not need to control the electrics to descend, as the support wheels operate automatically.

## 4.3 PLEASE PAY ATTENTION TO

### 4.3.1 SHIFT OF BALANCE

When ascending the balance of the load changes as soon the support wheels start lifting the load. Operators quickly become accustomed to this and compensate by tilting the handle.

Initially, before this operation becomes automatic, care should be taken at the point where the support wheels take the load when ascending. There is a forward movement of the machine which is easily compensated for by tilting the handle backwards.

Lowering backwards by 10° to 20° before the support wheels start to lift eliminates any major forward movement.

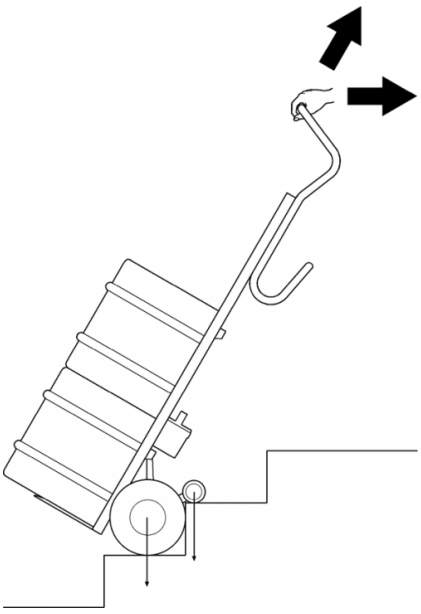

## 4.3.2 HOOKING IN UNDERNEATH THE STEP

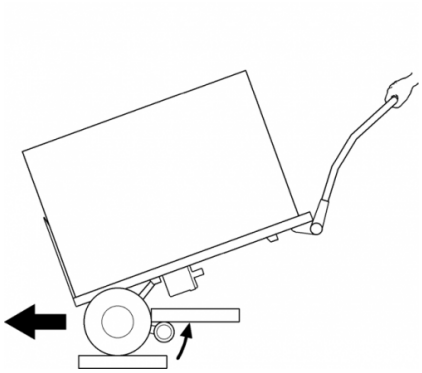

Under normal operating conditions, with the load in a well-balanced position, the moving support arm is always clear of the underside of the upper step (see chapter 4.2). If the LIFTKAR is laid back too far, the support arm will be tripped by touching the tread it is on, causing it to rotate under the upper tread. The electronics will go into overload mode and will need to be reset.

## 4.3.3 OVERLOAD

If the unit is overloaded the drive motor stops and the LED flashes red for 3 seconds before going out. The unit has to be switched on again.

> Once the battery has been discharged the unit will go into overload even with loads below the specified capacity.

## 4.3.4 LIFTKAR IS NOT A RUBBER PAD

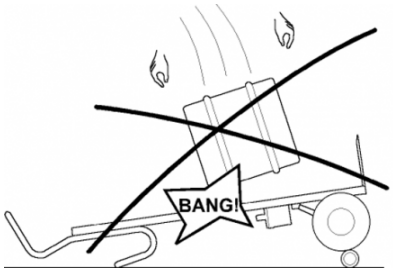


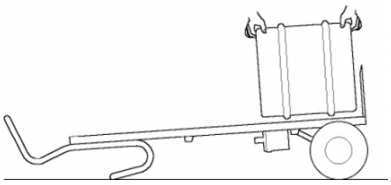

In the beverage industry drums are sometimes directly thrown from the truck onto the hand truck instead of a rubber pad or old tyre.

**This is not possible with the LIFTKAR when the support wheels are in the descending position.** The impact will be transmitted to the connecting bar via the drive unit, which may result in fracture. With the support wheels raised between the main wheels, throwing barrels on the unit is possible in principle since the pneumatic tyres would absorb part of the impact, it is nevertheless not recommended as it detrimental to service life.

## 4.3.5 INADVERTENT BATTERY EJECTION

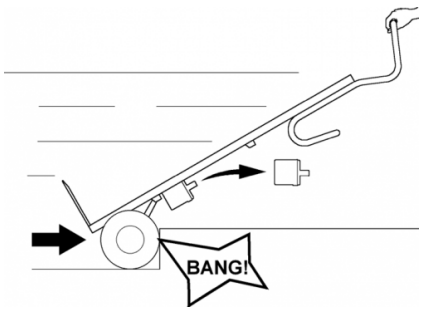


For all normal operations the battery is held securely by locking hooks. A strong pull is required to remove it. Abuse of the LIFTKAR by moving backwards very quickly, and striking a high step, or similar, will result in the battery being ejected from its location.

If you pull the LIFTKAR up the stairs empty or without using the drive mechanism, it is recommended to remove the battery. Firstly, this makes the LIFTKAR lighter and secondly, the battery cannot jump out.

## 4.3.6 FAILURE TO NEGOTIATE STEPS "SQUARE-ON"

Failure to negotiate steps "square-on" will result in damage to the underside of the drive unit.

## 4.3.7 DRIVING ON A WINDING STAIRCASE

Please observe the following points when operating the stairclimber on spiral staircases:

The LIFTKAR moves inwards when climbing up, so:
**For climbing UP start on the outside of the staircase.**

The LIFTKAR moves outwards when going down, so:
**For climbing DOWN start on the inside.**

If you do start moving too close to the banisters/wall then shift the unit to the side by reversing (on a landing or wider step if possible) and start again at a tighter angle.

# 5 CHARGING THE BATTERY

The battery-cells within the battery housing are maintenance-free, sealed and rechargeable. Their durability largely depends on the charge/discharge cycles. For example, it is possible to partially discharge lead batteries 1000 times, drawing more than 200 times the full capacity of the battery, providing the battery is never fully discharged.

- For this reason, avoid total discharge. Recharge as often as possible.
- Lead-acid batteries are subjected to ‘self-discharge’. For this reason, the snap-on battery should be recharged after a maximum of three weeks of disuse.
- The charger automatically switches to trickle charging so overcharging is not possible.
- Do not leave the battery discharged or half discharged. Always charge immediately after use.
- If the batteries should become damaged it is possible to have them replaced in any reputable mechanical workshop. The old lead batteries are fully recyclable and are not to be disposed of.
- The optimum temperature for charging is 20 – 25 °C. Too cold or too warm has a negative effect on the capacity.
- Operating and charging temperature: For unrestricted functionality, the cell temperature of the battery must always be kept above 0°C. Therefore, we recommend storing the battery between +5°C and +25°C.

Operating and charging temperature

| | | lead-gel battery | Stair climber |
|---|---|---|---|
| Operating temperature | °C | -10 ... +40 | -10 ... +40 |
| Charging temperature | °C | -10 ... +40 | - |

If the battery has not been fully charged or tends to lose charge too rapidly, this will not only reduce the speed of the LIFTKAR but also reduce the capacity. It may move into the overload mode as a result, even with light loads. See Operation 4.3.3.

## 5.1 BATTERY CHARGER

The battery charger supplied is extremely powerful. An LED display gives a clear indication of charging status. The charge indicator gives you an idea whether the battery pack is fully charged or not. It is worth checking that the battery pack is fully charged before using the Liftkar.



The charge status is displayed as follows by a LED:

- If the LED is lit continuous red the battery pack is being charged.
- If the LED is lit continuous green the battery pack is fully charged. The charger can be left connected to the batteries after full charge (green light), without harming the batteries. The charger uses minimum power in this stand-by mode, (after battery is fully charged), maintains the batteries at full charge and extends battery life. This is accomplished with electronic circuitry that controls and regulates the amount of charging current that is sent from the charger to the battery being charged.

### 5.1.1 TECHNICAL DATA

Mains voltage supply (50/60 Hz, 0,7A): 100-240 V AC

Nominal rating (input): 24 W

Charging voltage: 24 V DC

Theoretical charging current: 1,0

Protection class: IPX4

Safety approval: UL, cUL, CE

### SAFETY GUIDELINES

Please note the following:

- Protect against damp
- Only charge in a well ventilated room
- Do not pull the plug out of the socket by its cord
- Do not operate charger with damaged cord or plug - replace immediately!

### 5.1.2 USE ONLY FOR THE PURPOSE INTENDED

- The charger unit is designed exclusively for charging **lead-acid batteries containing liquid, gel-type and fabric-type electrolyte**
- It is not permissible to charge NiCd or NiMH batteries or primary cells.

---

# 6 ACCESSORIES AND OPTIONS

A continuously growing list of accessories and options is available. For instance, different toe plate sizes, securing straps, in-transit charger, different frame heights, fixed or hinged toe plate.

# 7 DISPOSAL

Liftkar SAL stairclimbers are durable products. At the end of their useful life the stairclimber components and charger should be disposed of properly. Make sure the materials are separated carefully for disposal in line with the material codes relating to each component.

The stairclimber does not contain any hazardous materials and is fully recycling-compatible. The printed circuit boards and the rechargeable battery must be disposed of using a suitable recycling process.

Do not simply dispose of the battery pack in a household dustbin, however. If there are any further questions, please ask your specialist dealer.

Sano can organise professional disposal of the whole stairclimber unit, against payment, if required.

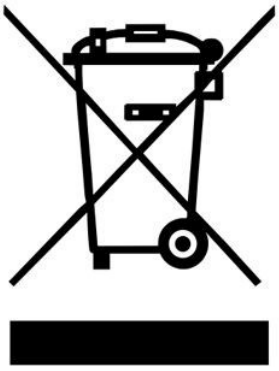

# 8 WARRANTY AND LIABILITY

## 8.1 WARRANTY

The warranty period for the LIFTKAR is 12 months (6 months for batteries) from the date of purchase and covers defective material and production faults

Not included in the warranty are:

- Normal wear and tear on parts
- Damage resulting from abnormal load
- Damage due to the exertion of force
- Inadmissible modifications to the unit or accessory parts

## 8.2 LIABILITY

SANO Transportgeraete GmbH as manufacturer is not responsible for the safety of the LIFTKAR SAL if:

- the LIFTKAR SAL is used other than is intended,
- repairs, installation or other work have been carried out by unauthorised persons.
- the instructions in these Operating Instructions are not observed
- non-original parts are installed or connected with the LIFTKAR SAL
- original parts are removed.
- Recommendation for Training
  The manufacturer recommends attending product training conducted by a qualified person. **Liability disclaimer:** Failure to undertake the recommended training absolves the manufacturer of any liability for damages to the device, personal injury, or property damage resulting from improper or incorrect operation.

# 9 CE DECLARATION OF CONFORMITY / DESIGN PROTECTION BY PATENTS

### 9.1 CE DECLARATION OF CONFORMITY

SANO Transportgeraete GmbH declares that the LIFTKAR SAL stair trolley corresponds to the applicable basic safety and health requirements of the EC guidelines for machines 2006/42/EEC, appendix IIA. This declaration will lose its validity if changes are performed on the unit without our approval.



Jochum Bierma (Ing.), Managing Director

### 9.2 DESIGN PROTECTION BY PATENTS

The lifting system of the SAL series is protected by international patent applications for Europe, USA and Japan. The modular structure of the basic frame is also protected by a patent application. Also, for the rotary joint of the FOLD model patent is pending.

# CONTACT

SANO Transportgeraete GmbH
Gewerbezeile 15
4040 Linz, Austria

Phone: +43 7239 51010 100
Fax: +43 7239 51010 001

office@sano.at

SANO Deutschland GmbH
Geigelsteinstraße 10
83080 Oberaudorf
Germany

Tel. +49 8033 / 308 96 0
Fax +49 8033 / 308 96 17
info@sano-treppensteiger.de

www.sano-treppensteiger.de

SANO UK Powered Stairclimbers Ltd.
Bristol Court, Betts Avenue
Martlesham Heath
Ipswich, Suffolk / IP5 3RY, England

Tel. +44 1473 / 333 889
Fax +44 1473 / 333 742
info@sano-uk.com

www.sano-uk.com

Changes without notice / LIFTKAR SAL 2022-05